YET 204

Popular item

Dimensions

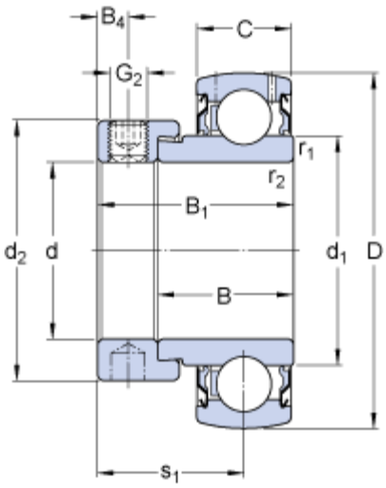

d		20	mm
D		47	mm
B_1		30.5	mm
B		21	mm
C		14	mm
d_1		28.2	mm
d_2		32.4	mm
B_4		4.75	mm
$r_{1,2}$	min.	0.6	mm
s_1		23.5	mm

Calculation data

Basic dynamic load rating	C	12.7	kN
Basic static load rating	C_0	6.55	kN
Fatigue load limit	P_u	0.28	kN
Limiting speed [1)]		8500	r/min
Calculation factor	f_0	13	

Mass

Mass complete bearing		0.16	kg

Mounting information

Thread grub screw	G_2	M6x0.75	
Hexagonal key size for grub screw	N	3	mm
Recommended tightening torque for grub screw		4	N·m

Assosiated products

Rubber seating ring	RIS 204