“SD”
Miniature screw

Smooth running and excellent backdriving with the new SD internal recirculation nut.

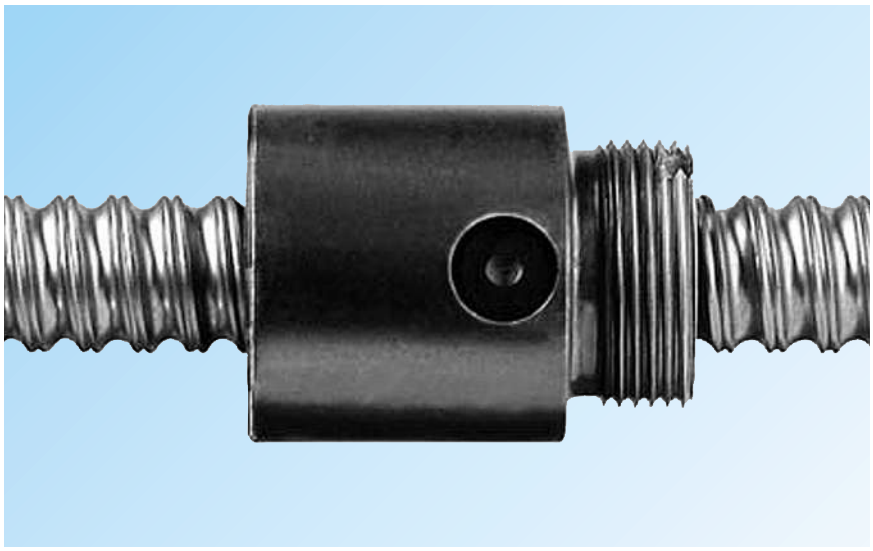

NEW

- Nominal diameter
  8 to 16 mm
- Lead
  2 to 5 mm
- Cylindrical nut with threaded end : easy mounting.
- Excellent repeatibility : high positioning quality.
- Internal recirculation with inserts : smooth running and good backdriving.
- Higher dynamic load capacities than the SH screw in the same diameter/lead.
- Optional safety device (*) : 12x4R - 14x4R - 16x5R
- Optional wipers (*) : 8x2,5R - 10x2R - 12x4R - 16x5R
- Corrosion resistant screw shaft available on request.

(*) It is not possible to supply safety device and wipers in the same nut.

Technical data

Nominal diameter	Right hand lead	Length maximum	Basic load ratings		Number of circuits of balls	Maximum axial play	Reduced maximum axial play (on request)	Mass of nut	Mass of screw shaft	Inertia of one metre of screw shaft	Designation
			dynamic	static							
d_0	P_h		C_a	C_{oa}							
mm	mm	mm	kN		—	mm		kg	kg/m	kgmm^2	
8	**2,5**	1050	2,2	2,6	3	0,07	0,03	0,025	0,32	2,1	**SD 8x2,5 R**
10	**2**	1050	2,5	3,5	3	0,07	0,03	0,030	0,51	5,2	**SD 10x2 R**
12	**2**	2100	2,4	3,4	3	0,07	0,03	0,023	0,67	10	**SD 12x2 R**
12	**4**	2100	5	6,5	3	0,07	0,03	0,066	0,71	10,8	**SD 12x4 R**
14	**4**	2100	6	9	3	0,07	0,03	0,083	1,05	22	**SD 14x4 R**
16	**2**	2100	3,6	6	3	0,07	0,03	0,10	1,40	39,7	**SD 16x2 R**
16	**5**	2100	7,6	10,5	3	0,07	0,03	0,135	1,30	33,9	**SD 16x5 R**

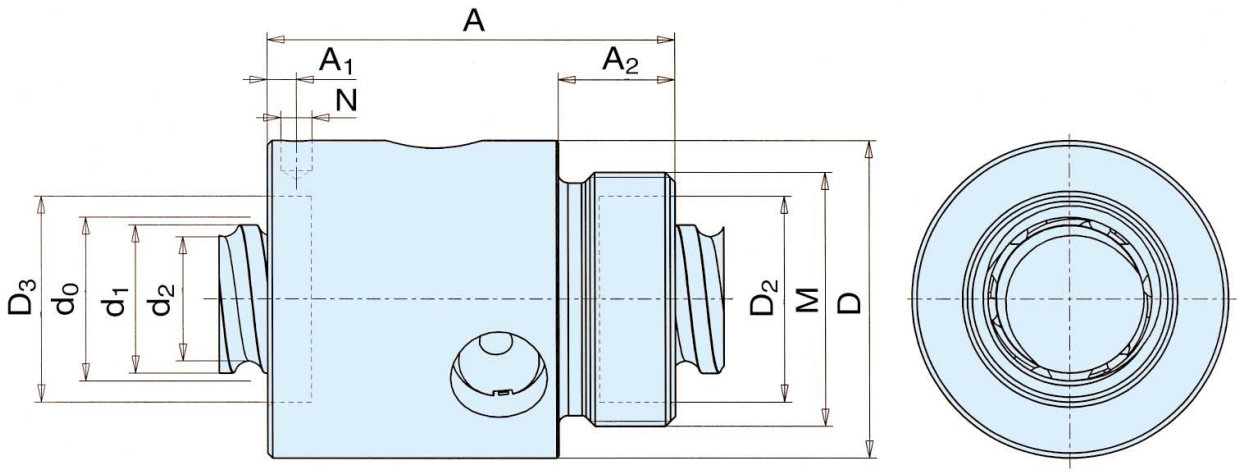

Designation	Screw shaft		Nut		Without wiper	With wiper		Tightening spanner			Without wiper	
	d_2	d_1	D h10	M 6g	A +/- 0,3		A_2	(FACOM)	N	A_1 ± 0,2	D_2	D_3
—	mm											
SD 8x2,5 R	6,3	7,6	17,5	M15x1	23,5	23,5	7,5	126-A35	3,2	3	11,1	11,1
SD 10x2 R	8,3	9,5	19,5	M17x1	22	22	7,5	126-A35	3,2	3	13,3	13,3
SD 12x2 R	9,8	11,2	20	M18x1	20	-	8	126-A35	3,2	3	13,2	-
SD 12x4 R	9,4	11,3	25,5	M20x1	34	34	10	126-A35	3,2	3	-	16,1
SD 14x4 R	11,9	13,7	27	M22x1,5	30	-	8	126-A35	3,2	3	-	-
SD 16x2 R	14,3	15,5	29,5	M25x1,5	27	-	12	126-A35	3,2	3	20,1	20,1
SD 16x5 R	12,7	15,2	32,5	*M26x1,5	42	42	12	126-A35	3,2	3	-	21,1

* Note : This thread is non standard, a special locknut can be developed on request.