

LED element,bottom,blue

Part no.	**M22-LEDC-B**
Article no.	**218058**
Catalog No.	**M22-LEDC-BQ**

Powering Business Worldwide

Delivery programme

Product range			RMQ-Titan (drilling dimensions 22.5 mm)
Basic function			LED elements
Single unit/Complete unit			Single unit
Fixing			Base fixing
Connection technique			Screw terminals
Rated operational voltage	U_e	V	12 - 30 V AC/DC
Rated operational current	I_e	mA	8 - 15
Power consumption	$P_{max.}$	W	0.26
			at 24 V
Colour			
			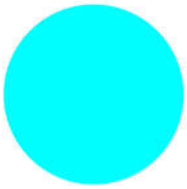
			Blue
Protection type			IP20
Front ring			- N/A -
Connection to SmartWire-DT			no

Notes

For pushbutton actuators, indicator lights, illuminated pushbutton actuators and illuminated selector switch actuators, the following applies:

M22...-R only in combination with M22-LED...-R

M22...-G only in combination with M22-LED...-G

M22...-W only in combination with M22-LED...-W

M22...-Y only in combination with M22-LED...-W

M22…-B in combination with M22-LED…-W or M22-LED…-B

Approvals

Product Standards	IEC/EN 60947-5; UL 508; CSA-C22.2 No. 14-05; CSA-C22.2 No. 94-91; CE marking
UL File No.	E29184
UL Category Control No.	NKCR
CSA File No.	012528
CSA Class No.	3211-03
North America Certification	UL listed, CSA certified
Degree of Protection	UL/CSA Type: -

General

Standards			IEC/EN 60947 VDE 0660
Operating torque (screw terminals)		Nm	0.8
Protection type			IP20
Climatic proofing			Damp heat, constant, to IEC 60068-2-78 Damp heat, cyclic, to IEC 60068-2-30
Ambient temperature		°C	
Open		°C	- 25 - + 70
Storage		°C	- 40 - + 80
Mounting position			As required
Mechanical shock resistance		g	30 Shock duration 11 ms Sinusoidal according to IEC 60068-2-27
Terminal capacities		mm^2	

Solid		mm^2	0.75 - 2.5
Stranded		mm^2	0.5 - 2.5

Contacts

Rated impulse withstand voltage	U_{imp}	V AC	6000
Rated insulation voltage	U_i	V	500
Overvoltage category/pollution degree			III/3

Notes

Notes > 200 V AC/60 Hz: -25/+55 °C

Indoor and protected outdoor installation

Technical data ETIM 5.0

Low-voltage industrial components (EG000017) / Lamp holder block for control circuit devices (EC000204)
Electric engineering, automation, process control engineering / Low-voltage switch technology / Command and alarm device / Bulb socket block for command and alarm devices (ecl@ss8-27-37-12-09 [AKF027010])

With integrated transformer			No
With integrated voltage decreasing resistor			No
With integrated lamp			Yes
With integrated diode			Yes
Lamp holder			None
Rated voltage Ue at AC 50 Hz		V	12 - 30
Rated voltage Ue at AC 60 Hz		V	12 - 30
Rated voltage Ue at DC		V	12 - 30
Voltage type for actuating			AC/DC
Type of lamp			LED
Connection type auxiliary circuit			Screw connection
Colour lamp			Blue
Type of fastening			Floor fastening

Dimensions

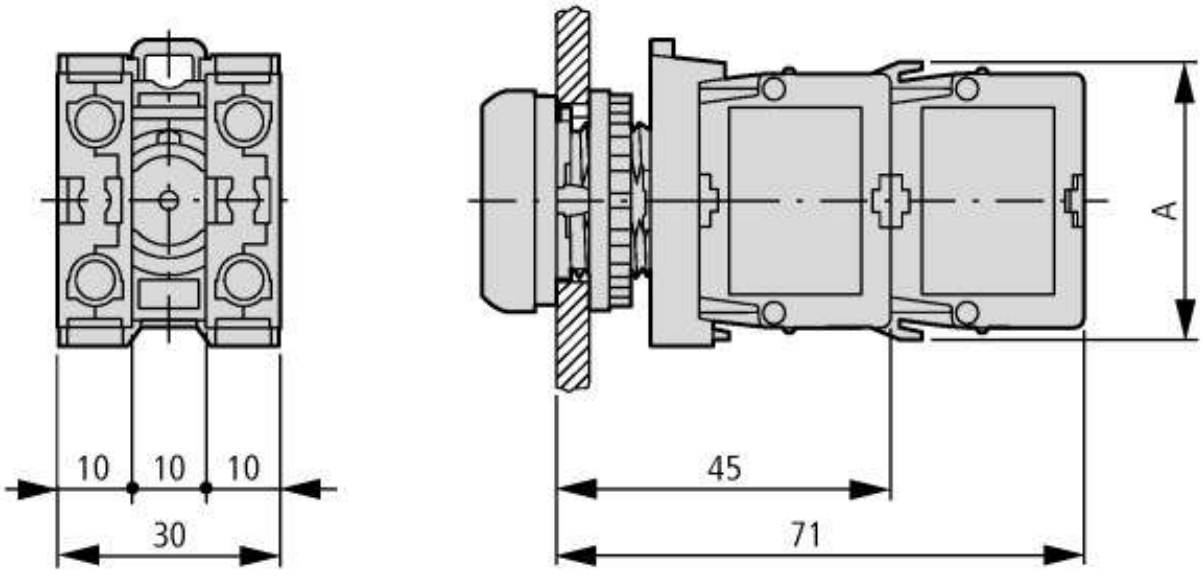

Pushbutton with M22-(C)K…
Pushbutton with M22-(C) LED… + M22-XLED…

Additional product information (links)

IL04716002Z (AWA1160-1745) RMQ-Titan System

IL04716002Z (AWA1160-1745) RMQ-Titan System	ftp://ftp.moeller.net/DOCUMENTATION/AWA_INSTRUCTIONS/IL04716002Z2013_08.pdf

© 11/2013 by Eaton Industries GmbH