E20796

Mounting set for position sensors

CLAMP M12 FREESTANDING

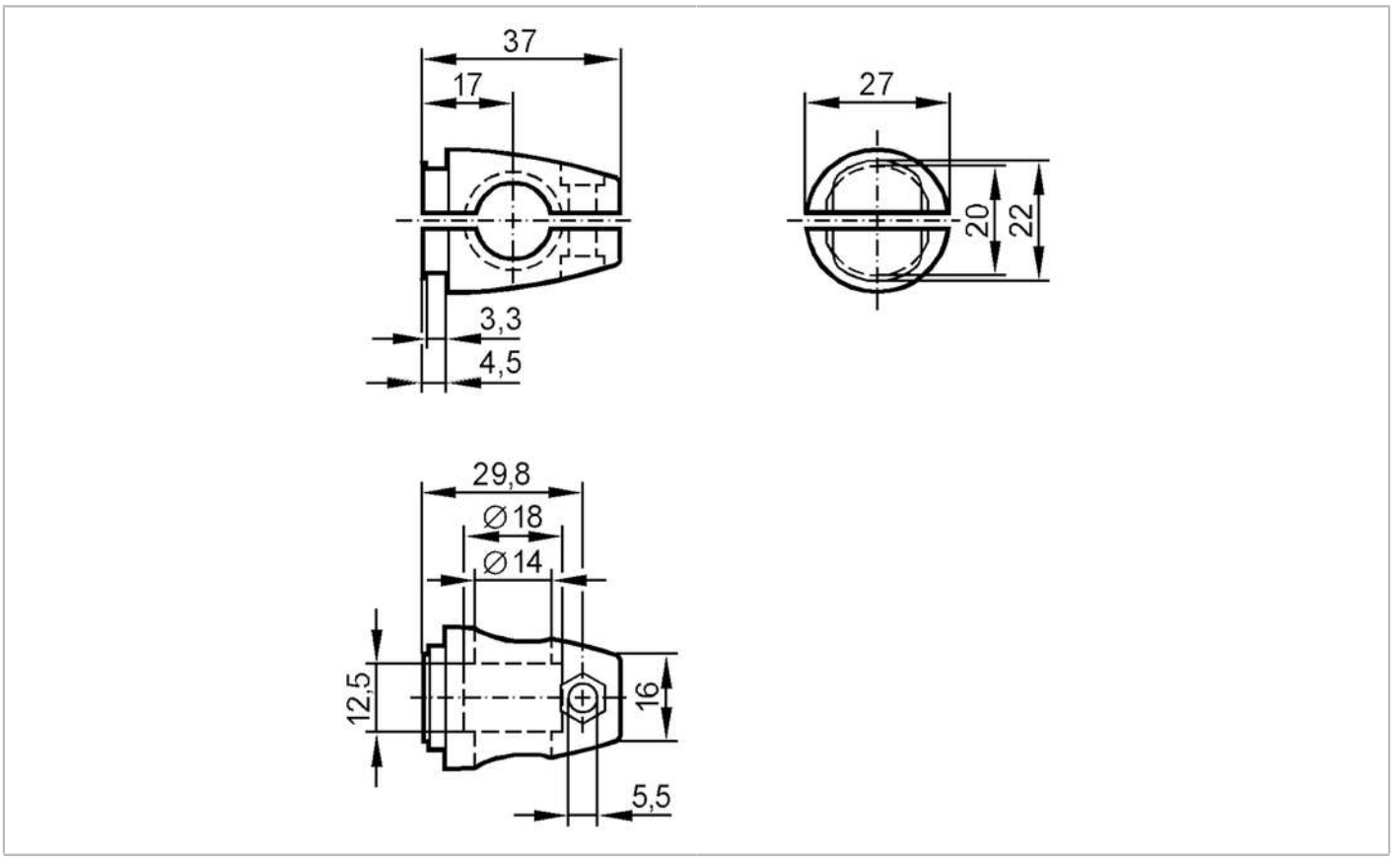

Mechanical data		
Weight	[g]	241.5
Type of mounting		free-standing; (M12)
Dimensions	[mm]	M12
Thread designation		M12
Materials		Clamp: diecast zinc
Accessories		
Items supplied		screw: 1 x M12 x 120
Remarks		
Pack quantity		1 pcs.