BOS R020K-PS-RX11-02
Order code: BOS0211

BALLUFF
sensors worldwide

Photoelectric sensor
Series R020K
Through-beam
Sn = 2 m

DC, direct current
PNP (1x)
NO: dark-on
800 Hz
LED, red light

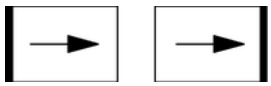

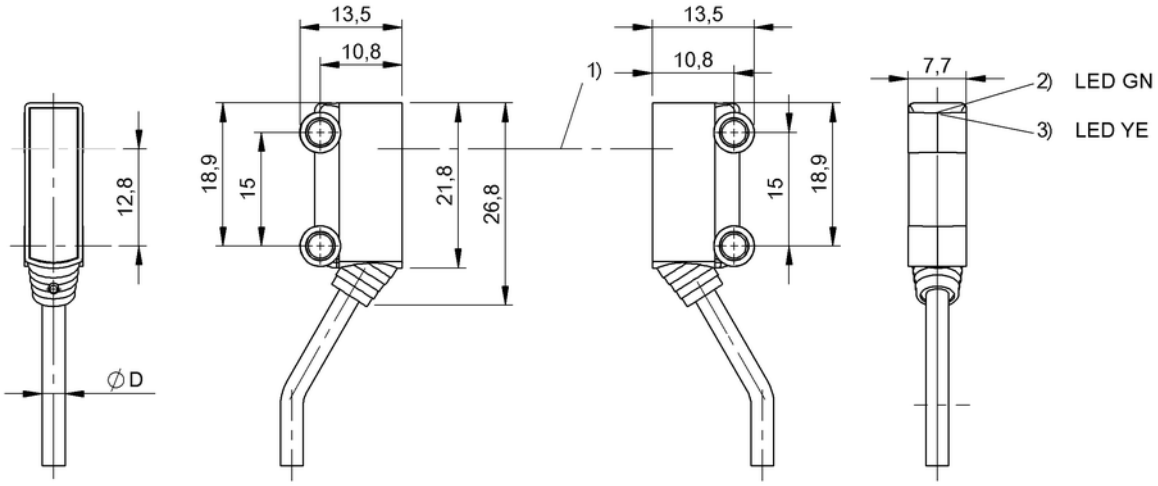

1) Optical axis 2) Power 3) Light reception

Basic data

Operating voltage UB DC	10.0 V... 30.0 V
Eff. operating voltage Ue DC	24.0 V
Ripple max. (% of Ue)	10 %
No-load current max. Io at Ue	15 mA
	20 mA
Polarity reversal protected	yes
Indicator	Power - LED GN
	Light receipt - LED YE
Ambient temperature Ta	-25 °C... 55 °C

Optical data

Principle of optical operation	Through-beam
Operating range Ro	0...2 m
Light type	LED, red light
Wavelength	660 nm
Light spot size, typical	Ø23 mm at 500 mm
Ambient light max.	5,000 Lux

Electrical data

Eff. operating distance Sr	2,000 mm
Switching output	PNP (1x)
Switching function	NO
Eff. operating current Ie	100 mA
Switching freq. f max. (at Ue)	800 Hz
Turn on time ton max.	0.63 ms
Turn off time toff max.	0.63 ms
Voltage drop Ud max. (at Ie)	2.0 V
Short circuit protected	yes

Mechanical data

Style	Block, 60° connection
Dimensions	7.7 mm x 13.5 mm x 26.8 mm
Mounting type	Screw M3
Housing material	PC, PBT
Werkstoff aktive Fläche	PMMA
Degree of protec. per IEC60529	IP67
Connection type	Cable
Cable length	2.00 m
Number of conductors	2
	3
Conductor cross-section	0.20 mm²
Cable jacket material	PVC

Approval

Approvals / Conformity	CE
	cULus

0000000000000/243248/00000000

BOS R020K-PS-RX11-02
Order code: BOS0211

BALLUFF
sensors worldwide

Photoelectric sensor
Series R020K
Through-beam
Sn = 2 m

DC, direct current
PNP (1x)
NO: dark-on
800 Hz
LED, red light

Remarks
Basic standard IEC 60947-5-2
Operating object (test target): Gray card, 200 x 200, lateral approach
For additional information, refer to user's guide.
Order accessories separately.

IND. CONT. EQ. 4R97 for use in the secondary of a class 2 source of supply

Definitions see general catalog

Subject to change without notice.

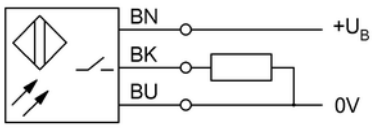

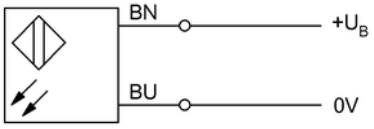

000000000000/243248/00000000