SERIES AZ17

Compact Tamper-Resistant Movable Machine Guard Safety Interlock Switch

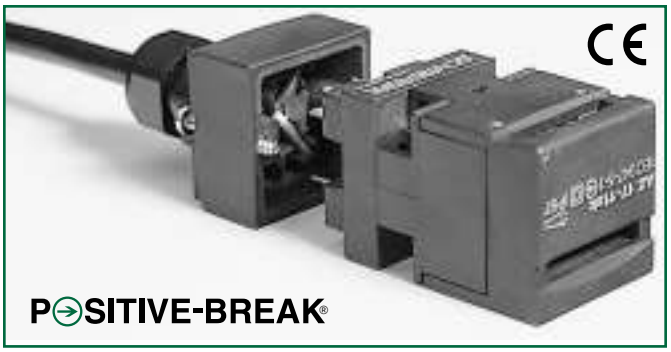



Features & Benefits

- **Compact design** … only 1¼" × 1¼" × 3". Ideal where space is limited.
- **Insulation Displacement Connector (IDC)** … facilitates fast, easy installation.
- **Watertight design** … meets IP67 washdown requirements.
- **Eight optional key entry locations** … depending upon mounting arrangement.
- **Highly tamper-resistant** … difficult to defeat with simple tools, tape, bent wires, etc. Reduces liability exposure.
- **"Positive-break" NC contacts** … assure interruption of safety circuit upon actuator key removal.
- **High-strength, stainless-steel actuator key** … tolerant to mechanical abuse without damage.
- **Rugged, corrosion-resistant, high-impact glass-fibre reinforced housing** … tolerates the most hostile environments.
- **"Padlockable" key for added security during maintenance.**
- **Meets rigid IEC, BG, VDE, UL & CSA standards.**
- **Three styles of actuator key** … accommodates a wide variety of movable guards.

Description

The compact Series AZ17 is designed for use with movable machine guards/access gates which must be closed for operator safety. Their positive-opening NC contacts provide a significantly higher level of safety than conventional spring-driven switches whose contacts can weld or stick shut. And their tamper-resistant design prevents bypassing with simple tools, bent wires or other readily available means. Their IP67 rating makes them ideal for interlocking safety guards in hostile environments.

Operation

The AZ17 electromechanical safety interlock switch consists of a rugged switch mechanism and a geometrically-unique actuating key. The key is mounted to the movable guard. Upon opening of the guard the NC contact(s) are forced to open through a direct (non-resilient) mechanical linkage with the actuating key. These positive-break NC contacts assure circuit interruption (and machine stoppage) upon removal of the actuator key. (The NO contact closes upon key removal.)

When the guard is closed, the actuating key forces the NC contacts to close and the NO contacts to re-open.

Typical Applications

The AZ17 is intended for use as a safety interlock switch on movable machine guards which, when open, expose the operator/maintenance personnel to machine hazards. Typical applications are the interlocking of protective gratings, access doors/gates, hinged covers, access panels and other movable guards.

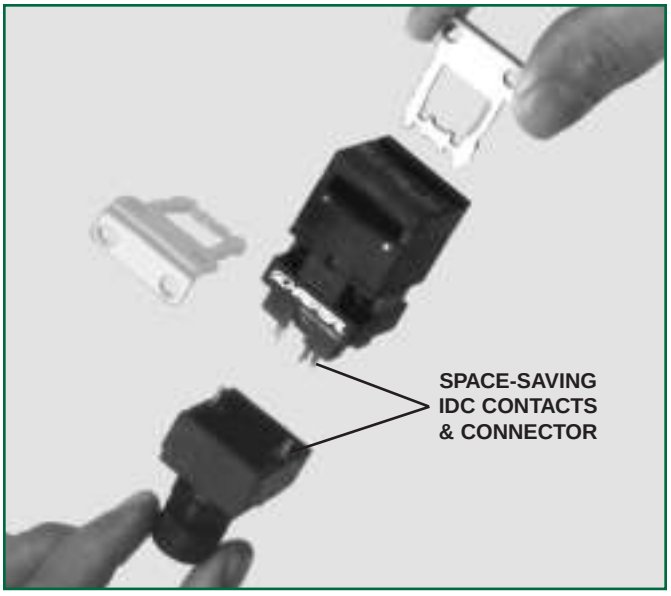

Note: Available with optional M12x1 quick-connect.

POSITIVE-BREAK® is a trademark of SCHMERSAL

AZ17 AVAILABLE MODELS AND ACCESSORIES

AVAILABLE STANDARD MODELS
(Actuator key must be ordered separately)

Part Number	Contacts (with actuator key inserted)
AZ17-11zk	1 NO & 1 NC
AZ17-11zrk	1 NO & 1 NC
AZ17-02zk	2 NC
AZ17-02zrk	2 NC
Solenoid-latching models available. (Model AZM170)	
Individually-coded key models available (Model AZ17zi) (For extra security in “high-risk” applications)	

Note: Pre-wired (5 meter length) cable entry models available. Add suffix “2243” for front of unit cable entry or suffix “2243-1” for rear cable entry.

Note: Optional “quick-connect” ... add suffix “ST” (e.g. AZ17-11zk-ST).

ACTUATOR KEYS & ACCESSORIES

Part Number	Description
AZ17/170-B1	Standard key (7.87" minimum closing radius)
AZ17/170-B5	Right-angle key (7.87" minimum closing radius)
AZ17-B6	Flexible, close-radius key (1.97" minimum closing radius)
AZ17/170-B11	Elongated standard straight key (7.87" minimum closing radius)
AZ17/170-B15	Elongated right-angle key (7.87" minimum closing radius)
AZ17/170-B1-2245	Standard straight key with vibration-resistant mounting (7.87" minimum closing radius)
MS AZ 17-P (See installation on Page 20)	Adjustable mounting kit for parallel mounting
MS AZ 17-R/P (See installation on Page 20)	Adjustable mounting kit for parallel or perpendicular mounting
Suffix “-ST”	Optional M12x1 quick-connect

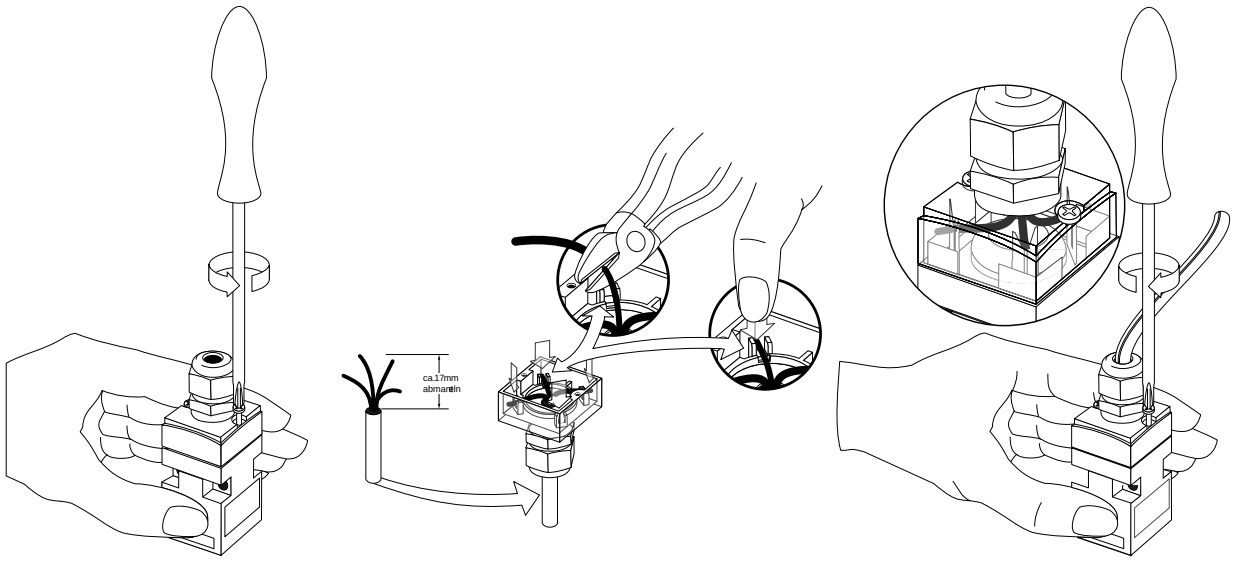

SELECTED ACTUATOR KEYS

AZ17/170-B1



AZ17/170-B5



AZ17-B6



AZ17 TECHNICAL DATA

MECHANICAL SPECIFICATIONS

Housing	Glass-fibre reinforced, self-extinguishing thermoplastic
Actuator Key	Stainless steel, 1.4301
Degree of Protection	IP67
Holding Force	zk models: 1.2 pounds zrk models: 7 pounds
Travel for Positive-Break	8 mm (0.315 inches)
Closing Force	Approx. 12N (2.7 pounds)
Operating Temperature	–22°F to +175°F
Mechanical Life	> 10^6 operations
Conformity to Standards	IEC 947-5-1 EN 60947-5-1 DIN VDE 0660-200 BG-GS-ET, pr EN 1088 UL & CSA
Minimum Closing Radius	1.97" (with AZ17-B6 actuator key) 7.87" (with B1, B5, B11 and B15 actuator key)

ELECTRICAL SPECIFICATIONS

Contacts	Fine silver
Contact Configuration	Double-pole, double-break with electrically separated contact bridges
Contact Rating	4A/230VAC 2.5A/230VA (with “ST” quick-connect)
Switching Action	Slow-action, positive-break NC contacts
Short Circuit Protection	6A (time-delay)
Rated Isolation Voltage	250V
Type Terminals	Insulation displacement contacts & connector for 18AWG flexible stranded wire (0.75 mm^2)

SWITCHING DIAGRAMS & CONTACT SCHEMATICS

AZ17-11z

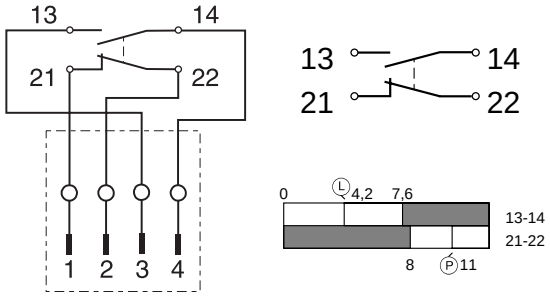

AZ17-02z

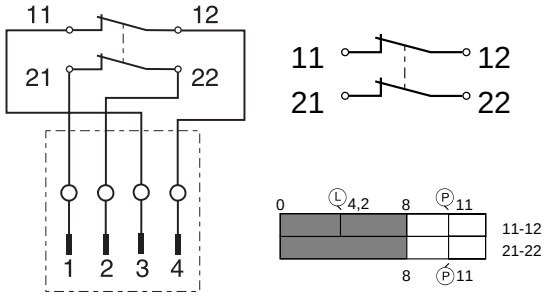

MS AZ 17 ADJUSTABLE MOUNTING KIT



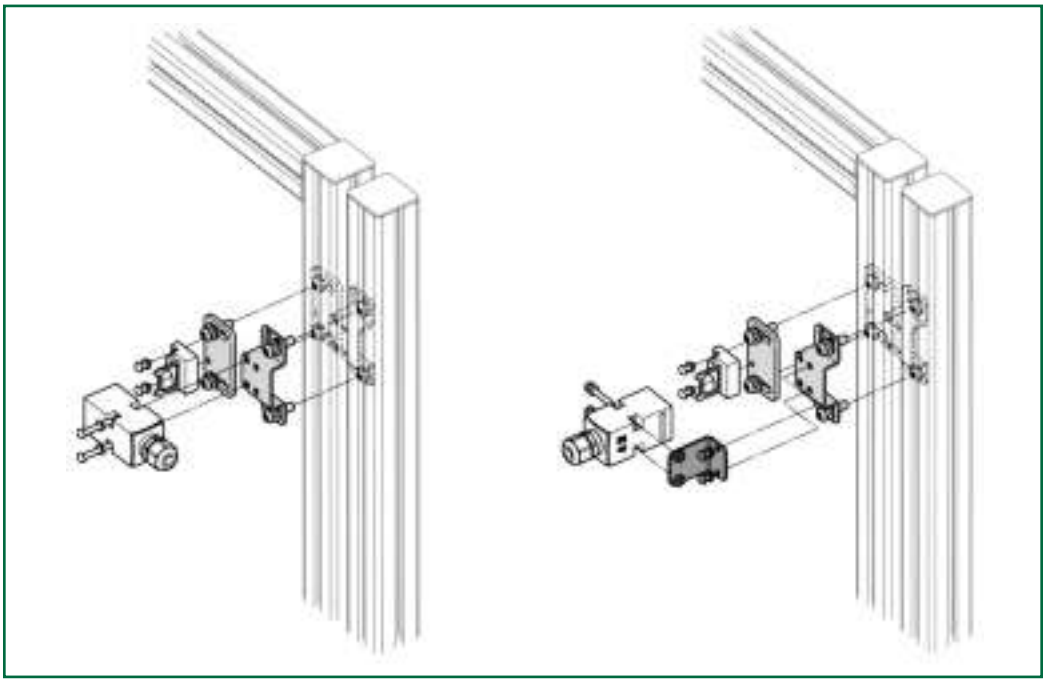

DIMENSIONS

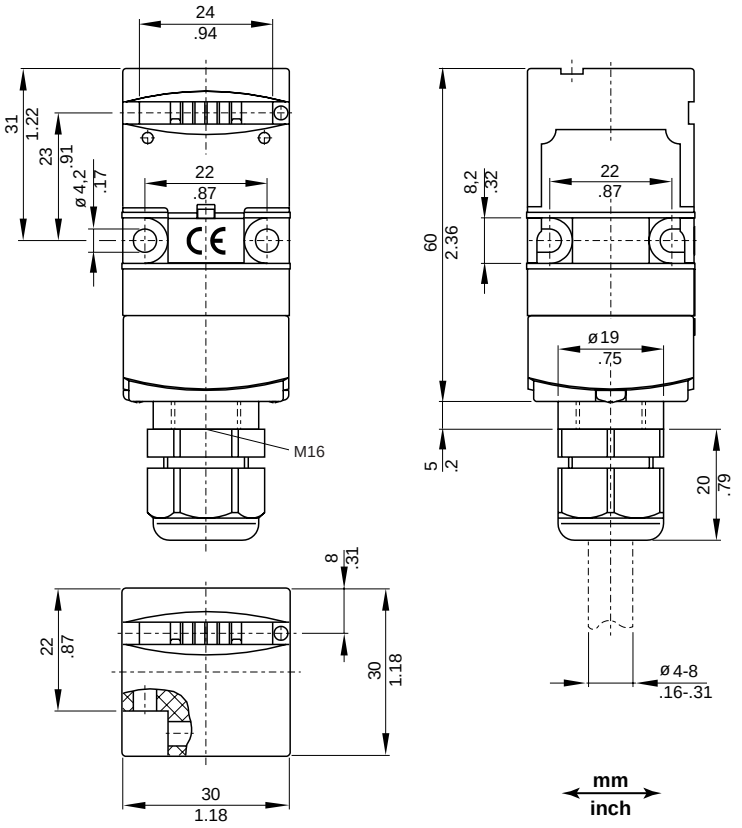

Switching Symbols **(Colors identify -2243 factory prewired models)**

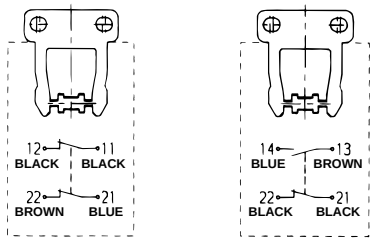

AZ17-02z **AZ17-11z**

Connections

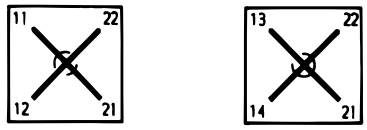

AZ17-02z **AZ17-11z**

same polarity; type four enclosure

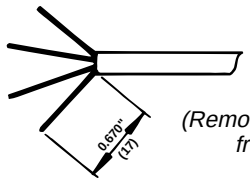

(Remove outer sleeve from cable)

ACTUATOR KEYS

AZ17/170-B1

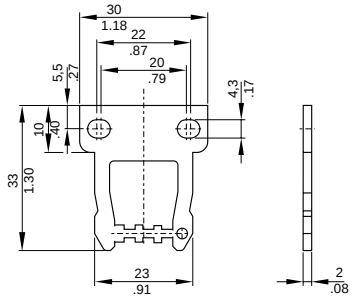

AZ17/170-B5

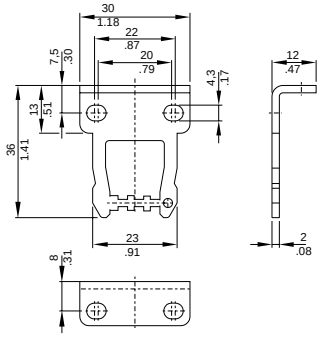

AZ17/170-B11

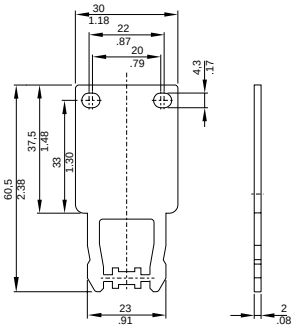

AZ17/170-B15

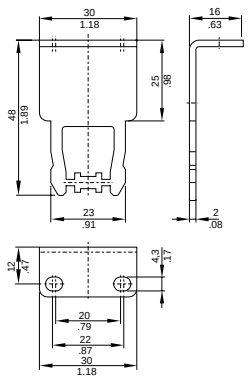

AZ17-B6

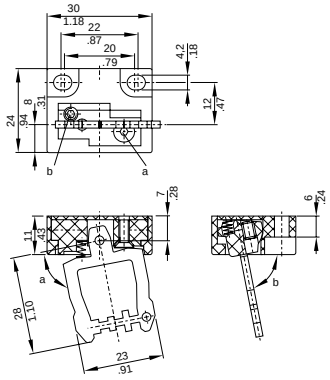

AZ17/170-B1-2245

