DATASHEET - T0-4-8344/I1/SVB



Main switch, T0, 20 A, surface mounting, 4 contact unit(s), 8-pole, Emergency switching off function, With red rotary handle and yellow locking ring, Lockable in the 0 (Off) position

Part no. T0-4-8344/I1/SVB
Catalog No. 207163

Delivery program

Product range			Main switch maintenance switch Repair switch
Part group reference			T0
Stop Function			Emergency switching off function
			With red rotary handle and yellow locking ring
Number of poles			8-pole
Locking facility			Lockable in the 0 (Off) position
Degree of Protection			IP65
			totally insulated
Design			surface mounting
			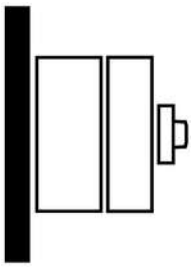
Contact sequence			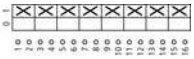
Switching angle		°	90
Design number			8344
Function			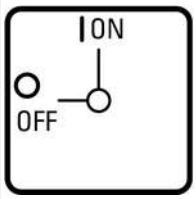
Motor rating AC-23A, 50 - 60 Hz			
400 V	P	kW	5.5
Rated uninterrupted current	I_u	A	20
Note on rated uninterrupted current I_u			Rated uninterrupted current I_u is specified for max. cross-section.
Number of contact units		contact unit(s)	4

Technical data

General

Standards			IEC/EN 60947, VDE 0660, IEC/EN 60204 Switch-disconnector according to IEC/EN 60947-3
Climatic proofing			Damp heat, constant, to IEC 60068-2-78 Damp heat, cyclic, to IEC 60068-2-30
Ambient temperature			
Enclosed		°C	-25 - +40
Overvoltage category/pollution degree			III/3
Rated impulse withstand voltage	U_{imp}	V AC	6000
Mechanical shock resistance		g	15

Mounting position			As required

Contacts

Mechanical variables			
Number of poles			8-pole
Electrical characteristics			
Rated operational voltage	U_e	V AC	690
Rated uninterrupted current	I_u	A	20
Note on rated uninterrupted current $!_u$			Rated uninterrupted current I_u is specified for max. cross-section.
Load rating with intermittent operation, class 12			
AB 25 % DF		x I_e	2
AB 40 % DF		x I_e	1.6
AB 60 % DF		x I_e	1.3
Short-circuit rating			
Fuse		A gG/gL	20
Rated short-time withstand current (1 s current)	I_{cw}	A_{rms}	320
Note on rated short-time withstand current Icw			Current for a time of 1 second
Rated conditional short-circuit current	I_q	kA	6

Switching capacity

cos φ rated making capacity as per IEC 60947-3		A	130
Rated breaking capacity cos φ to IEC 60947-3		A	
230 V		A	100
400/415 V		A	110
500 V		A	80
690 V		A	60
Safe isolation to EN 61140			
between the contacts		V AC	440
Current heat loss per contact at I_e		W	0.6
Current heat loss per auxiliary circuit at I_e (AC-15/230 V)		CO	0.6
Lifespan, mechanical	Operations	x 10^6	> 0.4
Maximum operating frequency	Operations/h		1200
AC			
AC-3			
Rating, motor load switch	P	kW	
220 V 230 V	P	kW	3
230 V Star-delta	P	kW	5.5
400 V 415 V	P	kW	5.5
400 V Star-delta	P	kW	7.5
500 V	P	kW	5.5
500 V Star-delta	P	kW	7.5
690 V	P	kW	4
690 V Star-delta	P	kW	5.5
Rated operational current motor load switch			
230 V	I_e	A	11.5
230 V star-delta	I_e	A	20
400V 415 V	I_e	A	11.5
400 V star-delta	I_e	A	20
500 V	I_e	A	9
500 V star-delta	I_e	A	15.6
690 V	I_e	A	4.9
690 V star-delta	I_e	A	8.5
AC-23A			
Motor rating AC-23A, 50 - 60 Hz	P	kW	
230 V	P	kW	3
400 V 415 V	P	kW	5.5

500 V	P	kW	7.5
690 V	P	kW	5.5
Rated operational current motor load switch			
230 V	I_e	A	13.3
400 V 415 V	I_e	A	13.3
500 V	I_e	A	13.3
690 V	I_e	A	7.6
DC			
DC-1, Load-break switches L/R = 1 ms			
Rated operational current	I_e	A	10
Voltage per contact pair in series		V	60
DC-21A	I_e	A	
Rated operational current	I_e	A	1
Contacts		Quantity	1
DC-23A, motor load switch L/R = 15 ms			
24 V			
Rated operational current	I_e	A	10
Contacts		Quantity	1
48 V			
Rated operational current	I_e	A	10
Contacts		Quantity	2
60 V			
Rated operational current	I_e	A	10
Contacts		Quantity	3
120 V			
Rated operational current	I_e	A	5
Contacts		Quantity	3
240 V			
Rated operational current	I_e	A	5
Contacts		Quantity	5
DC-13, Control switches L/R = 50 ms			
Rated operational current	I_e	A	10
Voltage per contact pair in series		V	32
Control circuit reliability at 24 V DC, 10 mA	Fault probability	H_F	$< 10^{-5}$,< 1 failure in 100,000 switching operations

Terminal capacities

Solid or stranded		mm^2	1 x (1 - 2,5) 2 x (1 - 2,5)
Flexible with ferrules to DIN 46228		mm^2	1 x (0.75 - 2.5) 2 x (0.75 - 2.5)
Terminal screw			M3.5
Tightening torque for terminal screw		Nm	1

Technical safety parameters:

Notes			$B10_d$ values as per EN ISO 13849-1, table C1

Rating data for approved types

Terminal capacity			
Terminal screw			M3.5
Tightening torque		lb-in	8.83

Design verification as per IEC/EN 61439

Technical data for design verification			
Rated operational current for specified heat dissipation	I_n	A	20
Heat dissipation per pole, current-dependent	P_{vid}	W	0.6
Equipment heat dissipation, current-dependent	P_{vid}	W	0
Static heat dissipation, non-current-dependent	P_{vs}	W	0
Heat dissipation capacity	P_{diss}	W	0

Operating ambient temperature min.	°C	-25
Operating ambient temperature max.	°C	40
IEC/EN 61439 design verification		
10.2 Strength of materials and parts		
10.2.2 Corrosion resistance		Meets the product standard's requirements.
10.2.3.1 Verification of thermal stability of enclosures		Meets the product standard's requirements.
10.2.3.2 Verification of resistance of insulating materials to normal heat		Meets the product standard's requirements.
10.2.3.3 Verification of resistance of insulating materials to abnormal heat and fire due to internal electric effects		Meets the product standard's requirements.
10.2.4 Resistance to ultra-violet (UV) radiation		UV resistance only in connection with protective shield.
10.2.5 Lifting		Does not apply, since the entire switchgear needs to be evaluated.
10.2.6 Mechanical impact		Does not apply, since the entire switchgear needs to be evaluated.
10.2.7 Inscriptions		Meets the product standard's requirements.
10.3 Degree of protection of ASSEMBLIES		Does not apply, since the entire switchgear needs to be evaluated.
10.4 Clearances and creepage distances		Meets the product standard's requirements.
10.5 Protection against electric shock		Does not apply, since the entire switchgear needs to be evaluated.
10.6 Incorporation of switching devices and components		Does not apply, since the entire switchgear needs to be evaluated.
10.7 Internal electrical circuits and connections		Is the panel builder's responsibility.
10.8 Connections for external conductors		Is the panel builder's responsibility.
10.9 Insulation properties		
10.9.2 Power-frequency electric strength		Is the panel builder's responsibility.
10.9.3 Impulse withstand voltage		Is the panel builder's responsibility.
10.9.4 Testing of enclosures made of insulating material		Is the panel builder's responsibility.
10.10 Temperature rise		The panel builder is responsible for the temperature rise calculation. Eaton will provide heat dissipation data for the devices.
10.11 Short-circuit rating		Is the panel builder's responsibility. The specifications for the switchgear must be observed.
10.12 Electromagnetic compatibility		Is the panel builder's responsibility. The specifications for the switchgear must be observed.
10.13 Mechanical function		The device meets the requirements, provided the information in the instruction leaflet (IL) is observed.

Technical data ETIM 7.0

Low-voltage industrial components (EG000017) / Switch disconnector (EC000216)		
Electric engineering, automation, process control engineering / Low-voltage switch technology / Off-load switch, circuit breaker, control switch / Switch disconnector (ecl@ss10.0.1-27-37-14-03 [AKF060013])		
Version as main switch		Yes
Version as maintenance-/service switch		Yes
Version as safety switch		Yes
Version as emergency stop installation		Yes
Version as reversing switch		No
Number of switches		1
Max. rated operation voltage Ue AC	V	690
Rated operating voltage	V	690 - 690
Rated permanent current Iu	A	20
Rated permanent current at AC-23, 400 V	A	13.3
Rated permanent current at AC-21, 400 V	A	20
Rated operation power at AC-3, 400 V	kW	5.5
Rated short-time withstand current Icw	kA	0.32
Rated operation power at AC-23, 400 V	kW	5.5
Switching power at 400 V	kW	5.5
Conditioned rated short-circuit current Iq	kA	6
Number of poles		8
Number of auxiliary contacts as normally closed contact		0
Number of auxiliary contacts as normally open contact		0
Number of auxiliary contacts as change-over contact		0
Motor drive optional		No
Motor drive integrated		No

Voltage release optional	No
Device construction	Complete device in housing
Suitable for ground mounting	Yes
Suitable for front mounting 4-hole	No
Suitable for front mounting centre	No
Suitable for distribution board installation	No
Suitable for intermediate mounting	No
Colour control element	Red
Type of control element	Door coupling rotary drive
Interlockable	Yes
Type of electrical connection of main circuit	Screw connection
Degree of protection (IP), front side	IP65
Degree of protection (NEMA)	Other

Dimensions

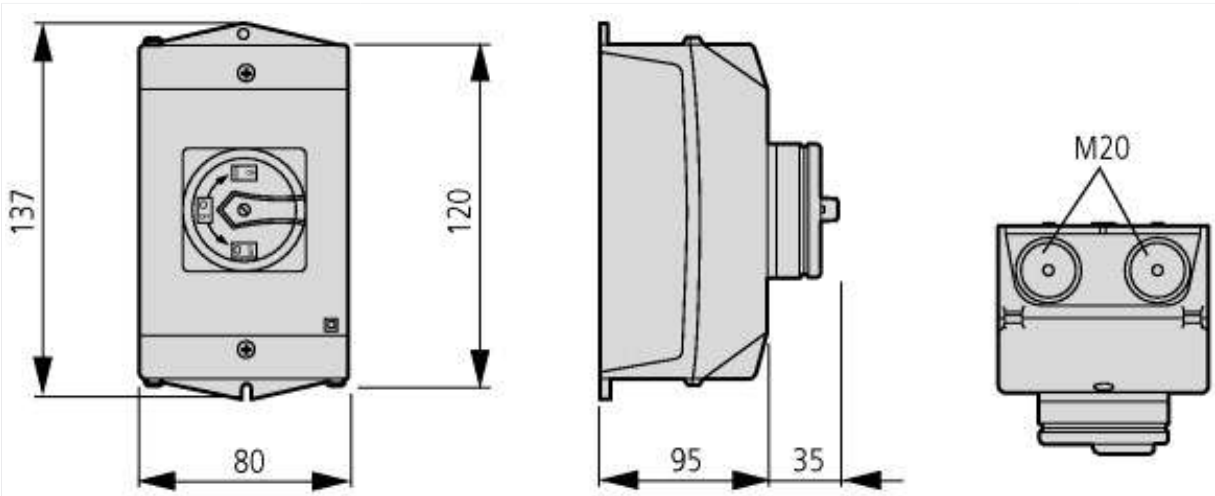

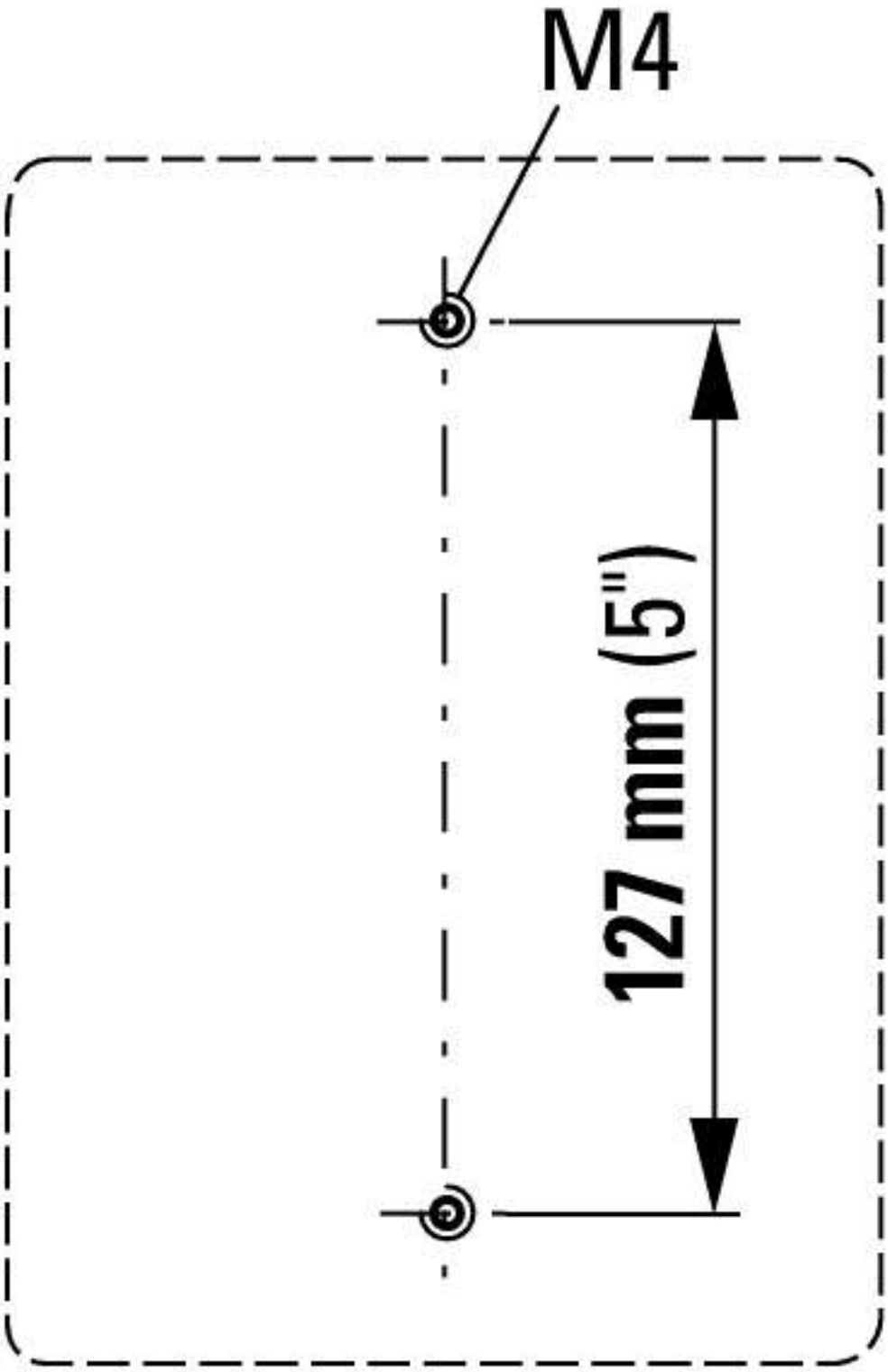

Drilling dimensions base

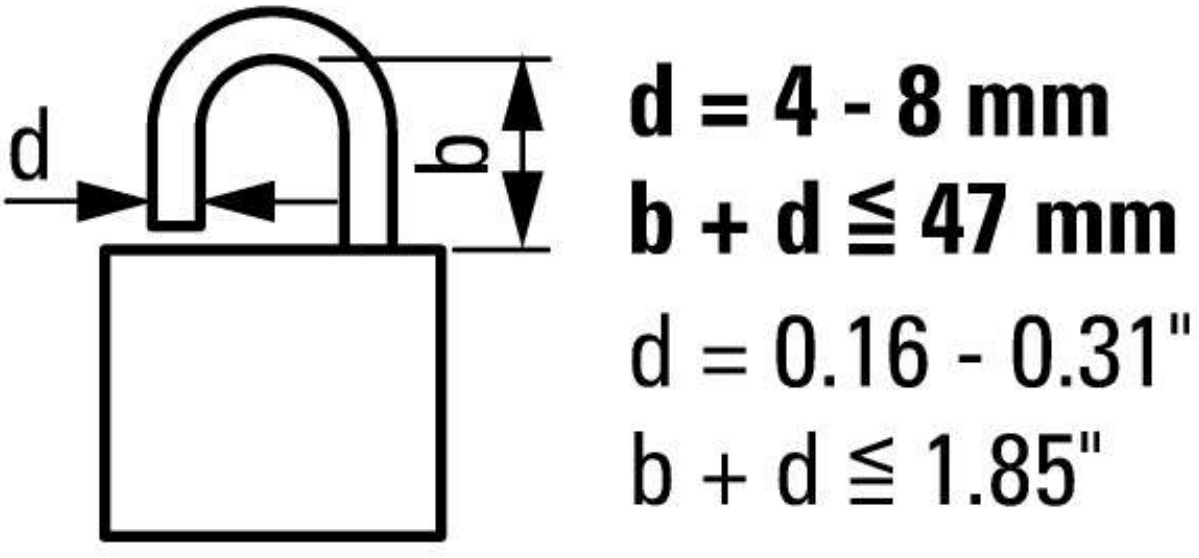

≦ 3 padlocks

Additional product information (links)

Display flip catalog page.	http://ecat.moeller.net/flip-cat/?edition=K115A&startpage=41
Technical overview cam switch, switch-disconnector	http://de.ecat.moeller.net/flip-cat/?edition=HPLTEv1&startpage=4.2
System overview cam switch T	http://de.ecat.moeller.net/flip-cat/?edition=HPLTEv1&startpage=4.4
System overview switch-disconnector P	http://de.ecat.moeller.net/flip-cat/?edition=HPLTEv1&startpage=4.6
Key to part numbers Cam switch	http://de.ecat.moeller.net/flip-cat/?edition=HPLTEv1&startpage=4.8
Key to part numbers Switch-disconnector	http://de.ecat.moeller.net/flip-cat/?edition=HPLTEv1&startpage=4.8
Switches for ATEX	http://www.coopercrouse-hinds.eu/en/products/25-ex-safety-and-main-current-switches.html

© 05/2021 by Eaton Industries GmbH