Product data sheet

LPAR 25

Linear plain bearing without seals, closed design



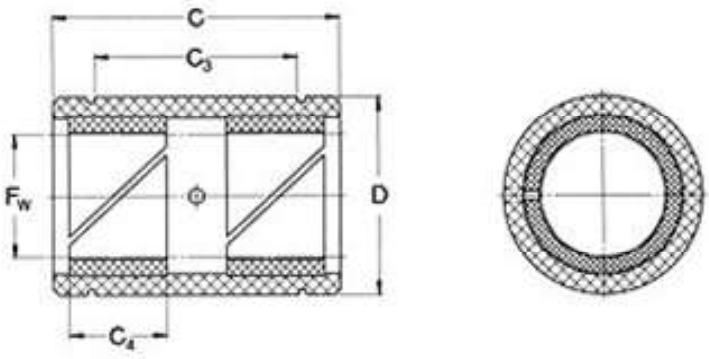

C [mm]:	58
C3 [mm]:	40
C4 [mm]:	20
D = Da [mm]:	40
Fw [mm]:	25
Cdyn 0,1:	4000
Cdyn 4 [N]:	100

Date: 27/05/2020

The contents of this report are the copyright of the publisher and may not be reproduced (even extracts) unless permission is granted. Every care has been taken to ensure the accuracy of the information contained in this report but no liability can be accepted for any loss or damage whether direct, indirect or consequential arising out of the use of the information contained herein.

EWELLIX
MAKERS IN MOTION

Product data sheet

LPAR 25

Linear plain bearing without seals, closed design

C0 [N]:	14000
Weight [kg]:	0.06
a [mm]:	60
E[mm]:	13.2

Date: 27/05/2020

The contents of this report are the copyright of the publisher and may not be reproduced (even extracts) unless permission is granted. Every care has been taken to ensure the accuracy of the information contained in this report but no liability can be accepted for any loss or damage whether direct, indirect or consequential arising out of the use of the information contained herein.