Sales information

ABB i-bus® EIB / KNX DALI Gateway DG/S 8.1

Intelligent Installation Systems



The symbiosis between lighting technology and building system technology

The DALI gateway from ABB STOTZ-KONTAKT

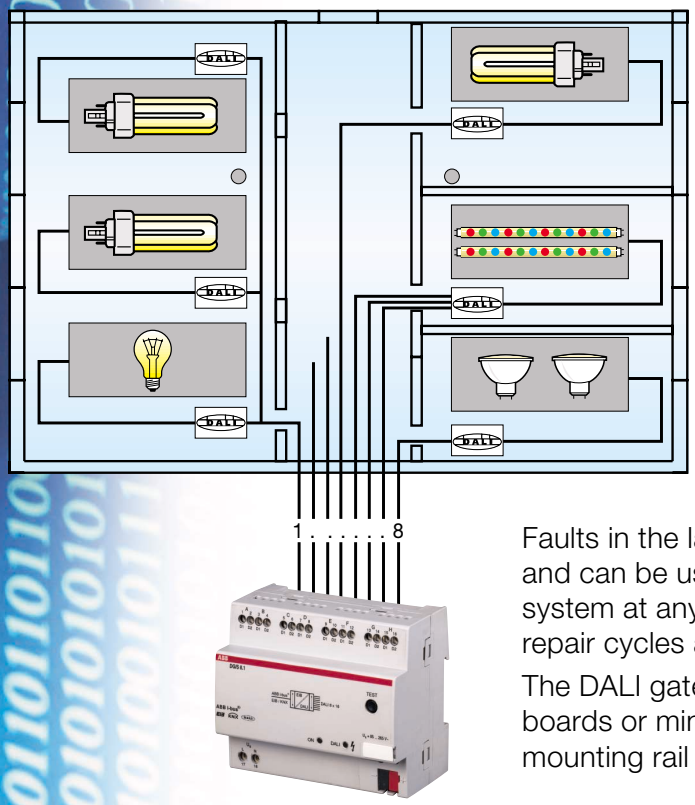

Via the ABB i-bus® DALI gateway DG/S 8.1, it is possible to integrate devices with a DALI interface into the EIB / KNX installation system and thereby link the functions of the DALI standard.

No addressing or commissioning of the DALI devices is required.

It is possible to implement a functional lighting control system with DALI equipment in the office area as well as effective lighting with dynamic light-scenes in exhibition areas or hotel foyers.

Faults in the lamps and electronic ballasts are detected and can be used to query the current status of a lighting system at any time and to co-ordinate maintenance and repair cycles accordingly.

The DALI gateway is suitable for insertion in distribution boards or miniature housing for snapping onto a 35 mm mounting rail in accordance with IEC 60715.

Modern lighting technology in building technology

DALI – the digital standard in lighting technology

DALI (Digital Addressable Lighting Interface) is an interface standard for digital lighting control systems which was created in 1999 by the leading manufacturers of electronic ballasts and standardised in IEC 60929. With DALI, a standard was created which meets the requirements of modern lighting technology due to its digital possibilities.

DALI has established itself in lighting technology as an interface with manufacturer neutrality. There is a comprehensive range of components with DALI interfaces. The DALI devices of the various manufacturers are compatible. With corresponding ballasts, transformers and relays it is possible to control fluorescent lamps, incandescent lamps and LEDs via DALI, include them in lightscenes and integrate them in the EIB / KNX building installation with the ABB i-bus® DALI gateway DG/S 8.1.

Numerous functions of modern lighting technology

Convenient and dynamic lighting control

The DALI gateway DG/S 8.1 is the linking element between DALI operating devices and the EIB / KNX building system technology.

The synchronised switching on/off, assignment of lightscenes and dimming of electronic ballasts with a DALI interface enable the setting of dynamic lighting effects.



The various DALI devices e.g. for fluorescent lamps, incandescent lamps or LEDs can be combined and integrated in up to 16 lightscenes and controlled at the same time.

After an adjustable scene transition period, all the devices involved in the scene reach their final brightness value simultaneously.

Lightscenes can be dimmed up and down, whereby the relative brightness variations are retained. Through the detection of faults in the lamps and electronic ballasts, the lighting components can be integrated in a higher-order Facility Management system in the EIB / KNX building automation.

Flexible commissioning in the usual way

No DALI commissioning

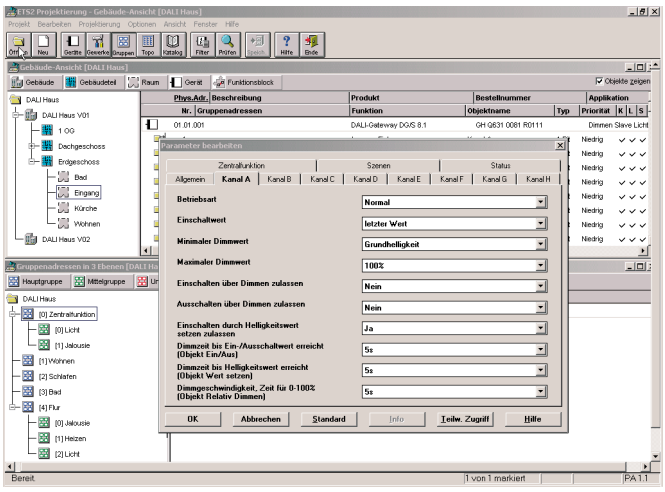

No special knowledge of DALI installations is required for using the ABB i-bus® DALI gateway DG/S 8.1. No addressing or commissioning of the connected DALI operating devices needs to be carried out.

The usual installation practices of 1…10 V technology serve as a basis for the installation of DALI devices on the DALI gateway. The correct connection of the DALI outputs can be checked without an EIB / KNX connection via a TEST button during the installation phase. There are 8 independent DALI outputs (channels) available. Up to 16 DALI devices can be connected per channels with a total of 128 DALI devices on the gateway. A separate DALI power supply is not required.

The parameterisation of the DG/S 8.1 is carried out via the EIB Tool Software (ETS). The setting of up to 16 lightscenes is possible via the ETS or via an EIB communication object.

DALI Gateway DG/S 8.1

Technical data

Operating voltage	85…265 V AC, 50/60 Hz 110…240 V DC
Connecting terminals	Screw terminal 0.2…2.5 mm² finely stranded 0.2…4 mm² single-core
Tightening torque	Max. 0.6 Nm
DALI outputs	8 in accordance with IEC 60929
Number of DALI devices	Max. 128, 16 per DALI output
Cable length	Max. 300 m (cable cross-section 1.5 mm²)
EIB / KNX connection	Bus connecting terminal, screwless
Temperature range	– 5° C ... + 45° C (during operation) – 25° C ... + 55° C (storage) – 25° C ... + 70° C (transport)
Type of protection	IP 20 in accordance with IEC 60 529
Overvoltage category	III in accordance with IEC 60664-1
Degree of pollution	2 in accordance with IEC 60664-1
Installation	35 mm mounting rail in accordance with IEC 60715
Dimensions	6 modules at 18 mm, 90 x 108 x 64 mm (H x W x D)
EIB / KNX	Approval in accordance with IEC 50090

Circuit diagram

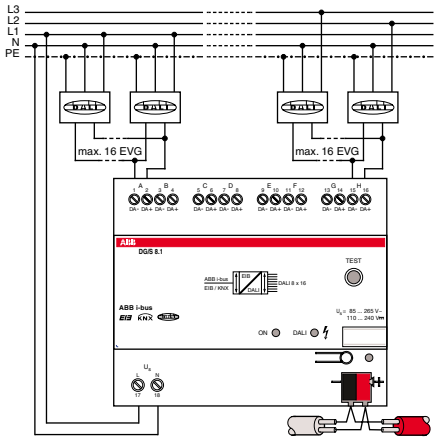

Ordering information

Selection table



Description	**Type**	Module width	Order no.	**bbn 40 16779 EAN**	**Unit weight** 1 pc. (kg)	**Pack unit**
DALI gateway, 8-fold, MDRC	DG/S 8.1	6	2CDG 110 025 R 0011	585828	0,190	1

The information in this leaflet is subject to change without further notice.

Pub No. 2CDC 507 051 D0201

Your EIB-Partner