REVISION HISTORY			
REV	DATE	BY	DESCRIPTION
G	29JUN2018	DJK/KAM	PRN: P2018-1583

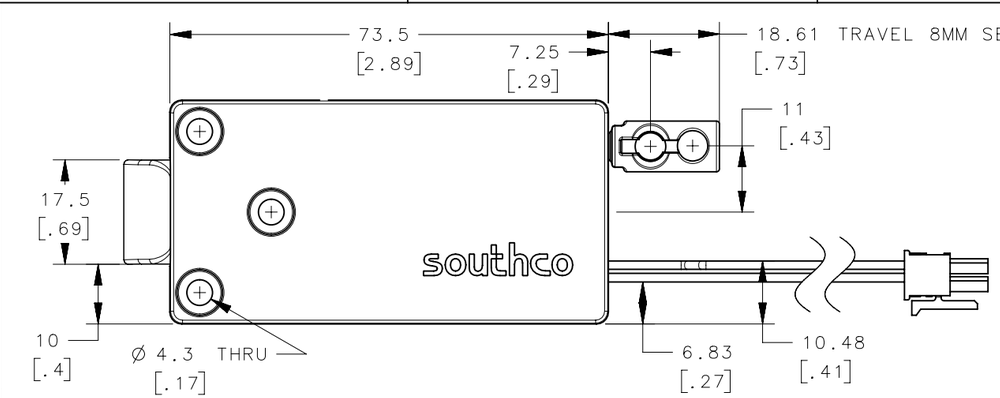

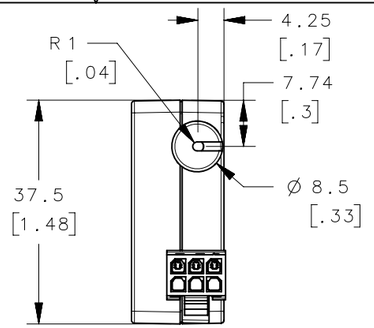

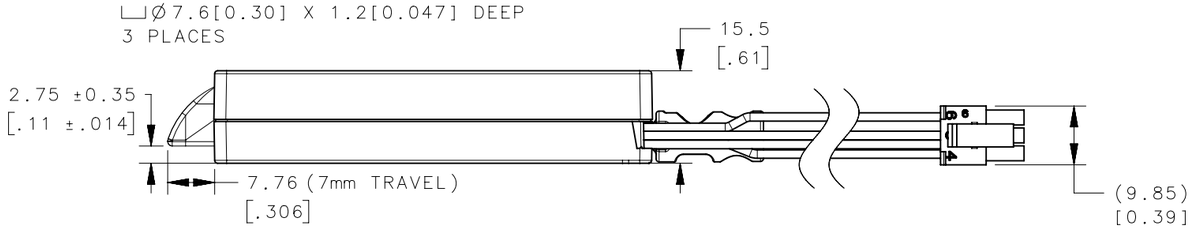

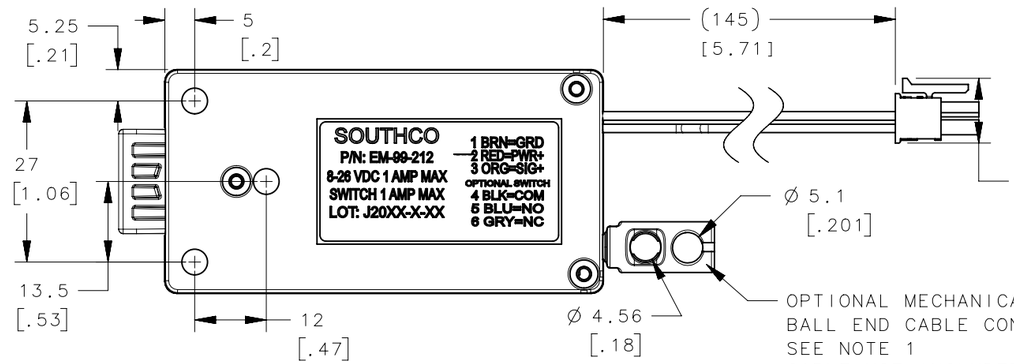

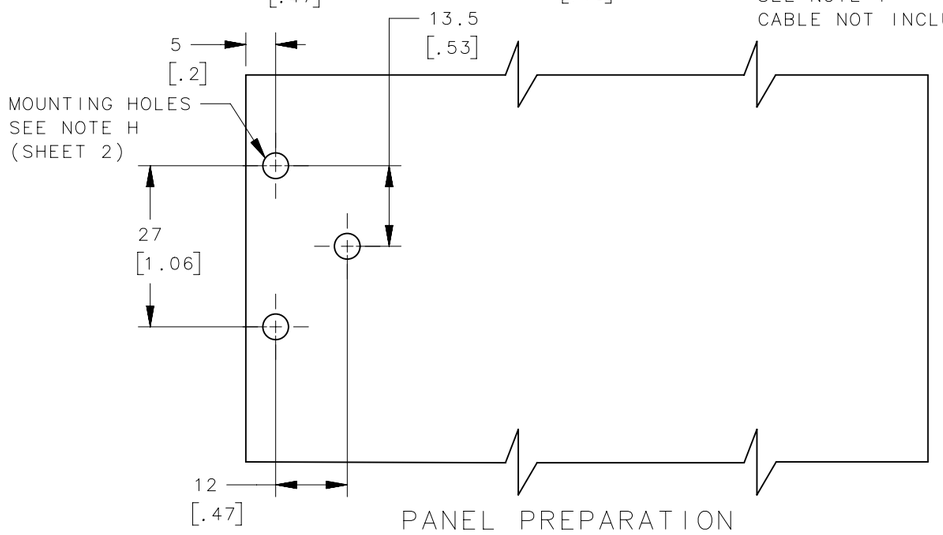

PANEL PREPARATION

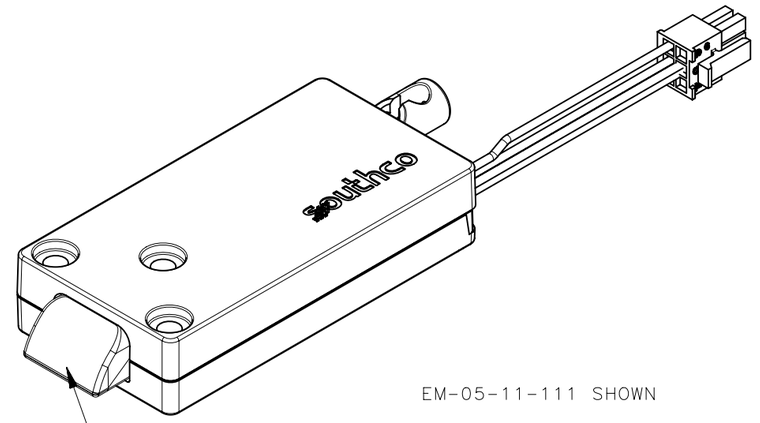

EM-05-11-111 SHOWN

LATCH BOLT
SHOWN IN EXTENDED POSITION

ASSEMBLY PART NUMBER VARIATIONS		
SWITCH OPTION	MECHANICAL OVERRIDE OPTION	ASSEMBLY PART NUMBER
POSITION FEEDBACK SWITCH	4.8MM CABLE BALL END CONNECTOR	EM-05-11-111
	NONE	EM-05-11-110
NO SWITCH	4.8MM CABLE BALL END CONNECTOR	EM-05-11-101*
	NONE	EM-05-11-100

* MECHANICAL VERSION AVAILABLE
ORDER PART NUMBER EM-05-21-001
MECHANICAL VERSION DOES NOT INCLUDE
DRIVE MOTOR OR ELECTRONICS
(SEE NOTE J, SHEET 2)

SURFACE AREA

VOLUME

PROPRIETARY ITEM
EXCEPT FOR USES EXPRESSLY GRANTED IN WRITING, INFORMATION DISCLOSED HEREON IS CONFIDENTIAL AND ALL RIGHTS, PATENT AND OTHERWISE, ARE RESERVED BY SOUTHCO, INC.

THIRD ANGLE PROJECTION

MILLIMETERS [IN]

TOLERANCES UNLESS OTHERWISE NOTED

ALL DIMENSIONS WITHOUT TOLERANCES ARE FOR REFERENCE ONLY.

PER ASME Y14.5M-1994

southco®
CONNECT·CREATE·INNOVATE

DESCRIPTION
ELECTRONIC KEEPER
FRONT MOUNT LATCH BOLT

SIZE	SYSTEM	DWG NO.
B	NX	J-EM-05-11-111

DRAWN BY	DATE	SCALE	SHEET
GGG	10SEP2010	1:1	1 OF 2

NOTES:

A. MATERIAL AND FINISH
   HOUSINGS, LATCH BOLT: PLASTIC (GLASS FILLED NYLON, ACETAL)
   INTERNAL COMPONENTS: PLASTIC (ACETAL) AND METAL COMPONENTS

B. ELECTRICAL SPECIFICATIONS:
   OPERATING VOLTAGE: 8 TO 26 VDC
   TYPICAL OPERATING CURRENT: LESS THAN 500 mA @ 12VDC
   PEAK/STALL OPERATING CURRENT: 1A MAX @ 12VDC (STALL LIMITED TO 1.4 SECOND)
   STANDBY CURRENT LESS THAN 185 MICROAMP
   CONTROL SIGNAL HIGH (UNLOCK COMMAND): 6 TO 26 VDC, 25 mA MAX
   CONTROL SIGNAL LOW (LOCK COMMAND): 0 TO 1VDC (OPEN)
   LATCH TRANSIT TIME TO RELEASE: 600 MILLISECONDS NO LOAD, 1 SECOND MAX.
   OPERATING TEMPERATURE RANGE: -20C TO +60C

C. ELECTRICAL CONNECTIONS AND HOOKUP:
   A BASIC SWITCH CONTROL ELECTRICAL HOOKUP DIAGRAM IS PROVIDED FOR REFERENCE.
   CONSULT WITH A SOUTHCO REPRESENTATIVE FOR ADDITIONAL ELECTRICAL HOOKUP INFORMATION.
   - CONNECT POWER, GROUND AND CONTROL SIGNAL WIRES TO AN APPROPRIATE DC POWER SUPPLY.
   - A DC POWER SUPPLY CAPABLE OF SUPPLYING 1 AMP MINIMUM IS RECOMMENDED.
   - POWER MUST BE AVAILABLE TO OPERATE THE LATCH AND MUST REMAIN AVAILABLE DURING THE FULL TRANSIT TIME OF THE LATCH DURING LOCKING OR UNLOCKING.

⚠ CAUTION ! LATCH CAN BE DAMAGED IF WIRED INCORRECTLY, OR IF IMPROPER VOLTAGE IS APPLIED!
   WIRE COLOR CODE/CONNECTOR PIN ASSIGNMENT:
   PIN 1: BROWN: GROUND(-)
   PIN 2: RED: POWER (+12V TYPICAL)
   PIN 3: ORANGE: CONTROL SIGNAL (+12V TYPICAL)
   PIN 4: BLACK: SWITCH COMMON (OPTIONAL)
   PIN 5: BLUE: SWITCH N.O. CONTACT (OPTIONAL)
   PIN 6: NONE

D. ELECTRICAL OPERATION:
   TO UNLOCK THE LATCH (LATCH BOLT RETRACTED):
   PROVIDE THE FOLLOWING CONTROL SIGNAL TO THE ORANGE WIRE OR CONNECTOR PIN 3
   - PROVIDE 6 TO 26 VDC (CONTROL SIGNAL HIGH) FOR A MINIMUM OF 50 MILLISECONDS (CONTACT SOUTHCO IF HIGHER COMMAND SIGNAL IS REQUIRED)
   - THE CONTROL SIGNAL CAN REMAIN HIGH FOR EXTENDED PERIODS OF TIME (WHEN THE CONTROL SIGNAL REMAINS HIGH FOR LONGER THAN 1 HOUR A RESISTOR SHOULD BE INSTALLED BETWEEN THE SUPPLY AND THE LATCH. SELECT RESISTOR VALUE FROM THE RESISTOR CHART BASED ON THE SUPPLY VOLTAGE TO MEET THE MINIMUM SPECIFICATIONS)
   - THE LATCH WILL STAY UNLOCKED FOR A MINIMUM OF 1 SECOND OR AS LONG AS THE SIGNAL IS HIGH
   TO LOCK THE LATCH (LATCH BOLT EXTENDED):
   PROVIDE THE FOLLOWING CONTROL SIGNAL TO THE ORANGE WIRE OR CONNECTOR PIN 3
   - PROVIDE 0 TO 1VDC (CONTROL SIGNAL LOW). POWER MUST BE AVAILABLE DURING TRANSIT TO LOCKED POSITION
   NOTE:
   - FROM THE LOCKED POSITION THE DOOR CAN BE PUSHED TO CLOSE AND WILL LOCK.

E. OPTIONAL LATCH BOLT POSITION FEEDBACK SWITCH AVAILABLE
   - A NORMALLY OPEN CONTACT (BLUE WIRE) PROVIDES SWITCH CLOSURE WHEN LATCH BOLT IS FULLY EXTENDED (LOCKED).
   - SWITCH COMMON (BLACK WIRE)
   SWITCH RATING: RATED UL CSA 0.1A/0.2A 48VDC/60VDC
   RECOMMENDED 1A MAX @ 12/24 VDC

⚠ WARNING! SWITCH CIRCUIT IS NOT FUSED OR ELECTRICALLY PROTECTED! USE APPROPRIATE EXTERNAL CIRCUIT PROTECTION.
   WIRE SWITCH CORRECTLY PER ELECTRICAL HOOKUP DIAGRAM AND DO NOT SHORT CIRCUIT.
   A SHORT CIRCUIT CAN DAMAGE LATCH AND MAY POSE AN ELECTRICAL FIRE HAZARD!

F. LATCH CONNECTOR:
   MANUFACTURER: MOLEX, SERIES: MICROFIT 3.0
   - CONNECTOR RECEPTICAL 6 POSITION 3MM VERTICAL DUAL: MOLEX P/N: 43025-0600
   - CONTACTS: FEMALE CRIMP TERMINAL (SOCKET) MOLEX P/N: 43030-0007
   WIRE: 24 AWG STYLE 1007
   WIRE LENGTH: SEE DRAWING FOR AVAILABLE LENGTH

G. MATE CONNECTOR (NOT SUPPLIED)
   MANUFACTURER: MOLEX, SERIES: MICROFIT 3.0
   - CONNECTOR PLUG 6 POSITION 3MM VERTICAL DUAL MOLEX P/N: 43020-0601
   - RECOMMENDED CONTACTS (6 MAXIMUM REQUIRED): MOLEX, MALE CRIMP TERMINAL (PIN) MOLEX P/N: 43031-0007
   - RECOMMENDED WIRE GAGE: 24 AWG

H. MOUNTING:
   - MOUNT THE LATCH SECURELY USING THREE (3) #6-32 OR M4 SCREWS IN MOUNTING HOLES PROVIDED (SCREWS NOT PROVIDED).
   - MAXIMUM TORQUE ON MOUNTING SCREWS M4: 2.27 N.m (20 lbf-in), #6-32: 1.67 N.m (15lbf-in)

I. MECHANICAL OPERATION (OPTIONAL):
   THE LATCH IS PROVIDED WITH A MECHANICAL OVERRIDE TO RELEASE THE LATCH.
   THE MAXIMUM TRAVEL OF THE OVERRIDE IS 8MM AS SHOWN.
   CABLE BALL END ADAPTER WILL ACCEPT Ø1.6±0.15MM [Ø.063±.006"] CABLE WITH Ø4.78±0.13MM [Ø0.188±.005"] BALL.
   CABLE NOT INCLUDED

⚠ CAUTION ! IT IS IMPORTANT TO ENSURE THE MECHANICAL RELEASE ROD IS FULLY IN THE LOCKED POSITION (LATCH BOLT EXTENDED) WHEN OPERATING THE LATCH ELECTRICALLY.
   CONTACT SOUTHCO FOR MECHANICAL RELEASE CABLES AND ACTUATORS

J. MECHANICAL ONLY VERSION DOES NOT INCLUDE DRIVE MOTOR OR ELECTRONICS. WIRES AND CONNECTOR SHOWN ARE NOT INCLUDED IN MECHANICAL VERSION.

K. PACKAGED IN INDIVIDUAL BOXES OR ADD -1 TO PART NUMBER FOR BULK PACKAGING
   EXAMPLE EM-05-11-111: PACKAGED ONE UNIT PER BOX
   EM-05-11-111-1: PACKAGED IN CELL DIVIDERS

REVISION HISTORY			
REV	DATE	BY	DESCRIPTION
G	29JUN2018	DJK/KAM	PRN: P2018-1583

N.O. = NORMALLY OPEN
N.C. = NORMALLY CLOSED

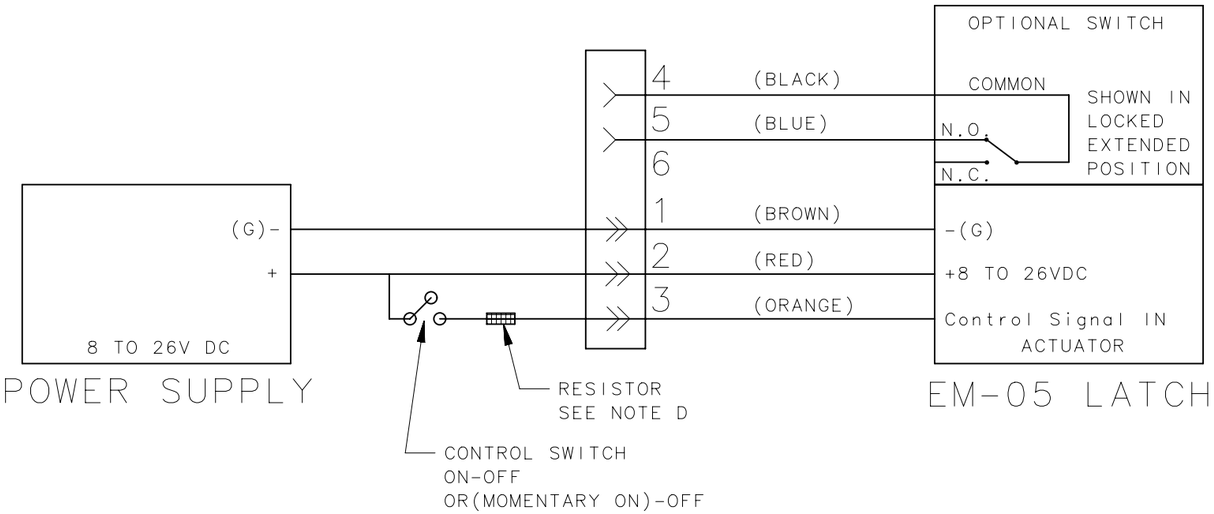

ELECTRICAL HOOKUP

RESISTOR CHART		
SUPPLY VOLTAGE	STANDARD RESISTOR VALUE	RESISTOR
26	2.26kΩ	RESISTOR CASE STYLE: AXIAL LEADED POWER RATING: 250mW RESISTANCE TOLERANCE: ±1% RESISTOR ELEMENT TYPE: METAL FILM TEMPERATURE COEFFICIENT: ±50ppm/°C
24	2.00kΩ	
22	1.78kΩ	
20	1.50kΩ	
18	1.27kΩ	
16	1.00kΩ	
14	750Ω	
12	499Ω	
10	255Ω	

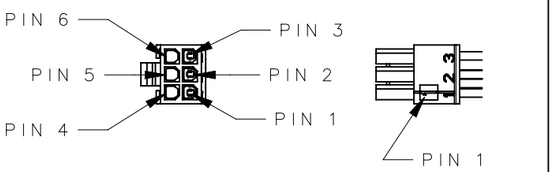

LATCH CONNECTOR

SURFACE AREA

VOLUME

PROPRIETARY ITEM

EXCEPT FOR USES EXPRESSLY GRANTED IN WRITING, INFORMATION DISCLOSED HEREON IS CONFIDENTIAL AND ALL RIGHTS, PATENT AND OTHERWISE, ARE RESERVED BY SOUTHCO, INC.

THIRD ANGLE PROJECTION

MILLIMETERS [IN]

TOLERANCES UNLESS OTHERWISE NOTED

ALL DIMENSIONS WITHOUT TOLERANCES ARE FOR REFERENCE ONLY.

PER ASME Y14.5M-1994

southco®
CONNECT·CREATE·INNOVATE

DESCRIPTION
ELECTRONIC KEEPER
FRONT MOUNT LATCH BOLT

SIZE	SYSTEM	DWG NO.
B	NX	J-EM-05-11-111

DRAWN BY	DATE	SCALE	SHEET
GGG	10DEC2010	1:1	2 OF 2