MURR ELEKTRONIK
stay connected

"T-Coupler 7/8" male / 7/8"" male + 7/8"" female"

5-pol.

T-coupler
Female straight – female/male straight
7/8" – 7/8", 5-pole
Parallel circuit
Plastic housings with good resistance against chemicals and oils.
The resistance to aggressive media should be individually tested for your application. Further details on request.

Link to Product

Illustration



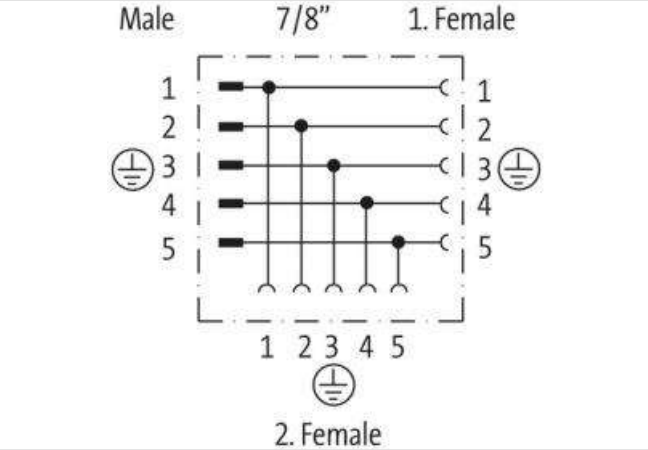

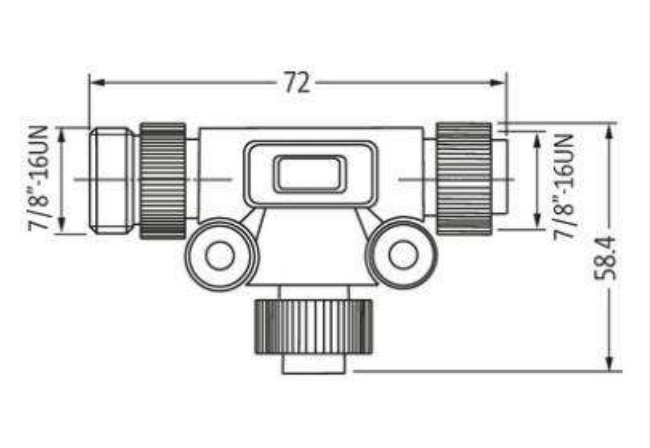

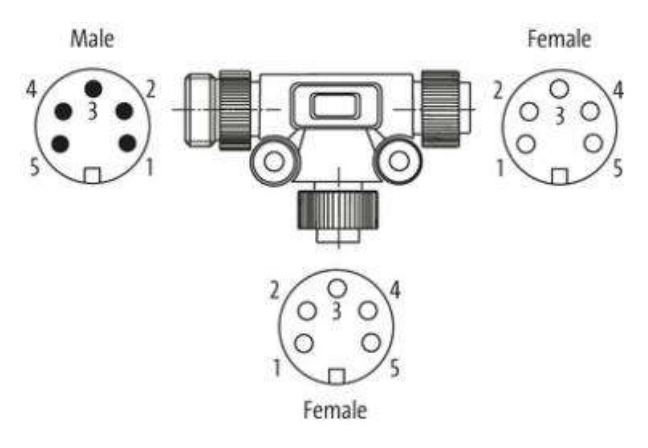

Product may differ from Image

Commercial data

ECLASS-6.0	27143423
ECLASS-6.1	27279221
ECLASS-7.0	27440104
ECLASS-8.0	27440104
ECLASS-9.0	27440106
ECLASS-10.1	27440106
ECLASS-11.1	27440106
ECLASS-12.0	27440106
ETIM-5.0	EC002062

The information in this Product-PDF has been compiled with the utmost care.
Liability for the correctness completeness and topicality of the information is restricted to gross negligence. Version: 2024-01-31

customs tariff number	85366990
GTIN	4048879138130
Packaging unit	1
Electrical data | Supply	
Operating voltage AC max.	50 V
Operating voltage DC max.	50 V
Current operating per contact max.	8 A
Device protection | Electrical	
Degree of protection (EN IEC 60529)	IP67
Additional condition protection degree	inserted, screwed
Mechanical data | Material data	
Coating locking	verzinkt
Locking material	Steel
Mechanical data | Mounting data	
Mounting method	inserted, screwed
Environmental characteristics | Climatic	
Operating temperature min.	-20 °C
Operating temperature max.	80 °C

The information in this Product-PDF has been compiled with the utmost care.
Liability for the correctness completeness and topicality of the information is restricted to gross negligence. Version: 2024-01-31