6628

2/2- and 3/2-way Rocker Solenoid Valve



- 22 mm ultra compact design with orifices upto DN 3.0
- Isolating diaphragm for high chemical resistance
- Circuit function NC, NO and 3-way universal
- Back pressure tightness via rocker principle
- Minimal internal volume with excellent cleanability

Direct acting medium separated 2/2- and 3/2-way Rocker Solenoid Valve for control of aggressive fluids and gases in analytical medical applications, the food industry, and also the chemical industry for dosing, filling, mixing and distribution.

The medium is in contact with fluid housing and seal material solely through the isolating diaphragm. This valve with the new TwinPower-actuator, robust screw-in connection and 22 mm installation width, will fulfil the highest requirements. The established rocker solenoid technology is characterized through full back pressure tightness, good rinsing capability and low internal volume. Type 6628 is available in different technical versions and by virtue of several body options, it offers a perfect adaption in fluid applications.

Circuit function A

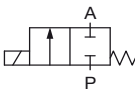

2/2-way valve, direct acting, normally closed

Circuit function B

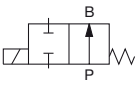

2/2-way valve, direct acting, normally open

Circuit function T

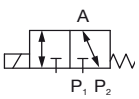

3/2-way valve, direct acting, universal function

Other circuit functions on request.

Technical Data	
Orifice	DN 2.0 or 3.0 mm
Body material	PEEK or PPS (PVDF, PP on request)
Seal material	FFKM, FKM or EPDM
Medium	Resistant to neutral and aggressive gases and liquids acc. to our chemical resistance chart
Medium temperature FKM FFKM EPDM	 0 to +55 °C +10 to +55 °C –10 to +55 °C
Ambient temperature FKM FFKM EPDM	 0 to +55 °C +10 to +55 °C –10 to +55 °C
Internal volume	approx. 200 µl
Viscosity	max. ca. 21 mm²/s
Port connection	▪ Bürkert-Flange (22 x 35 mm) ▪ G 1/8 ▪ NPT 1/8 ▪ Barbed hose connector 4 mm (5/32") ▪ Push-in connector (tube's external diameter 6mm)
Electrical connection	▪ PFA single flying leads, 0,5mm², 500mm ▪ Rectangular plug for cable plug Type 2505 ▪ Industry plug acc. to DIN 43650 Form B for cable plug Type 2507 on request ▪ circular connector M8 on request
Power supply	12 V DC, 24 V DC Other voltages on request
Voltage tolerance	±10%
Power consumption	5 W
Duty cycle	100 % continuous operation
Installation	As required, preferably with actuator upright
Protection class	IP 54 (IP40 with rectangular plug Type 2505)
Response times opening closing	Measurement at valve output with 2 bar and 20 °C acc. to DIN ISO 12238:2001 25 ms (pressure build-up 0-10%) 25 ms (pressure build-up 100-90%)
Manual override	on request

DTS 1000170656 EN Version: B Status: RL (released | freigegeben | validé) printed: 29.08.2013

Burkert Direct, Unit 173 Argyle Industrial Street, Nechells, Birmingham, B7 5TE
www.burkertdirect.com, sales@burkertdirect.com, Tel: +44 (0) 1213287288

Ordering chart

Circuit function	Orifice [mm]	Port connection	Kv value water [m³/h]	Q_{Nn} value air [l/min]	Pressure range [bar]	Max. pressure difference [bar]	Seal material	Body material	Electrical connection	Voltage/ Frequency [V/Hz]	Item no.
A 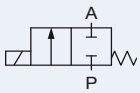 2/2-way valve, direct acting, NC	2	Bürkert-Flange	0.1	110	Vac-5	5	EPDM	PPS	Rectangular plug	24/DC	250 857
									Flying leads, 500 mm		251 614
	3		0.17	180	Vac-3	3				12/DC	241 727
									Rectangular plug		246 199
									Flying leads, 500mm		242 030
									Plug top	24/DC	251 643
		Hose connector						PEEK	Flying leads, 500 mm		251 613
		G 1/8									236 170
									Plug top		251 644
	2	Bürkert-Flange	0.1	110	Vac-5	5	FKM	PPS	Rectangular plug	24/DC	251 618
									Flying leads, 500 mm		251 620
	3		0.17	180	Vac-3	3				12/DC	246 382
									Rectangular plug		248 017
									Flying leads, 500mm		251 624
									Plug top		238 616
		Hose connector						PEEK	Flying leads, 500 mm	24/DC	251 628
		G 1/8									242 340
									Plug top		238 615
		Push-in connection						PPS	Flying leads, 500mm		251 650
	2	Bürkert-Flange	0.1	110	Vac-5	5	FFKM	PEEK	Rectangular plug	24/DC	235 315
									Flying leads, 500 mm		234 350
	3		0.17	180	Vac-3	3				12/DC	235 316
									Rectangular plug		235 317
									Flying leads, 500 mm	24/DC	230 304
		Hose connector									235 318
		G 1/8									235 319
B 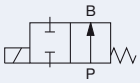 2/2-way valve, direct acting, normally open	3	Bürkert-Flange	0.17	180	Vac-3	3	FFKM	PEEK	Flying leads, 500 mm	24/DC	251 686
T 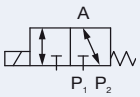 3/2-way valve, direct acting, Universal version	2	Bürkert-Flange	0.1	110	Vac-5	5	EPDM	PPS	Rectangular plug	24/DC	250 859
									Flying leads, 500 mm		241 889
	3		0.17	180	Vac-2	2				12/DC	241 726
									Rectangular plug		251 616
									Flying leads, 500mm		245 256
									Plug top	24/DC	251 645
		Hose connector						PEEK	Flying leads, 500 mm		251 617
		G 1/8									245 205
									Plug top		251 647
	2	Bürkert-Flange	0.1	110	Vac-5	5	FKM	PPS	Rectangular plug	24/DC	251 629
									Flying leads, 500 mm		251 630
	3		0.17	180	Vac-2	2				12/DC	251 633
									Rectangular plug		251 634
									Flying leads, 500mm		251 635
									Plug top		251 684
		Hose connector						PEEK	Flying leads, 500 mm	24/DC	251 637
		G 1/8									251 638
									Plug top		251 649
		Push-in connection						PPS	Flying leads, 500mm		251 685

DTS 1000170656 EN Version: B Status: RL (released | freigegeben | validé) printed: 29.08.2013

Ordering chart, continued

Circuit function	Orifice [mm]	Port connection	Kv value water [m³/h]	Q_{Nn} value air [l/min]	Pressure range [bar]	Max. pressure difference [bar]	Seal material	Body material	Electrical connection	Voltage/ Frequency [V/Hz]	Item no.
T 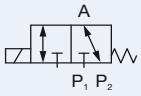 3/2-way valve, direct acting, Universal version	2	Bürkert-Flange	0.1	110	Vac-5	5	FFKM	PEEK	Rectangular plug	24/DC	235 320
									Flying leads, 500 mm		234 340
	3		0.17	180	Vac-2	2				12/DC	235 321
									Rectangular plug	24/DC	235 322
		Hose connector							Flying leads, 500 mm		230 305
											235 323
		G 1/8									235 325

- Kv-value water [m³/h] max. flow rate for water measured at +20° C, 1 bar pressure to atmosphere
- Rectangular plug types delivered without plug (see ordering chart for accessories)

Further versions on request

Electrical connection
Cable plug connection acc. to Form B (industrial standard)
Flying leads

Material
Other Body and Seal materials on request

Ordering chart for accessories

Rectangular plug Type 2505

	Accessories	Item no.
	Rectangular cable plug Type 2505 with 3 m cable	133 486
	Rectangular cable plug Type 2505 with 300 mm flying leads	644 068

Cable Plug Type 2507 according to Industrial standard Form B

	Accessories	Version	Voltage	Item no.
	Cable Plug Type 2507	without Circuitry	0 ... 250 V AC/DC	423 845
		with LED	24 V AC/DC	423 849

DTS 1000170656 EN Version: B Status: RL (released | freigegeben | validé) printed: 29.08.2013

Ordering chart for manifold

Multiple Manifolds with individual service port (G1/8) and diverter function on 2 common channels (G1/8); Delivery without valves; Material: anodized aluminium

Manifold	A [mm]	Item no.
2-fold	47	669 571
3-fold	69	672 633
4-fold	91	669 572
5-fold	113	672 661
6-fold	135	669 570
10-fold	223	672 660

▪ Other versions on request.

Manifold

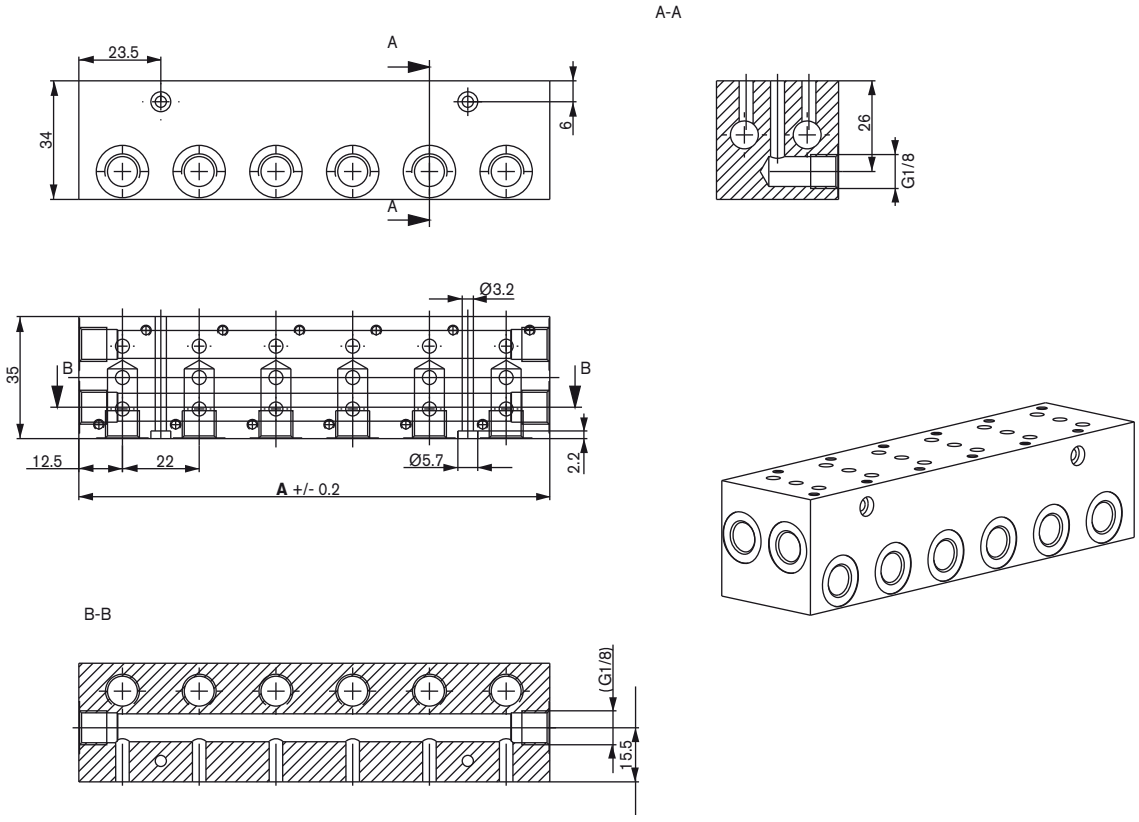

DTS 1000170656 EN Version: B Status: RL (released | freigegeben | validé) printed: 29.08.2013

Dimensions [mm]

Threaded port version with Rectangular plug

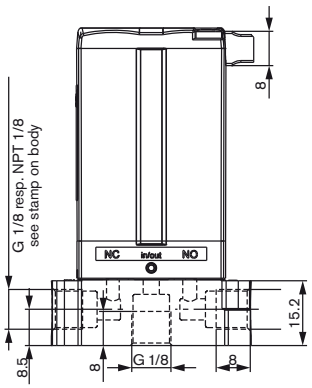

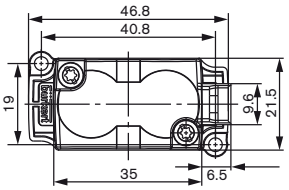

Flange version for Cable Plug

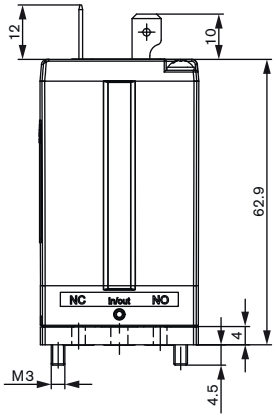

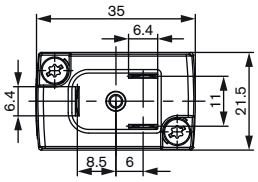

Flange interface for manifold

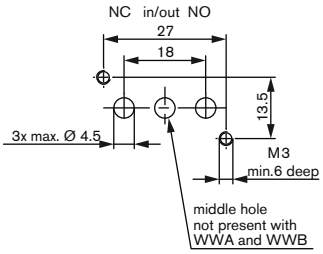

Barbed hose connector with Flying leads

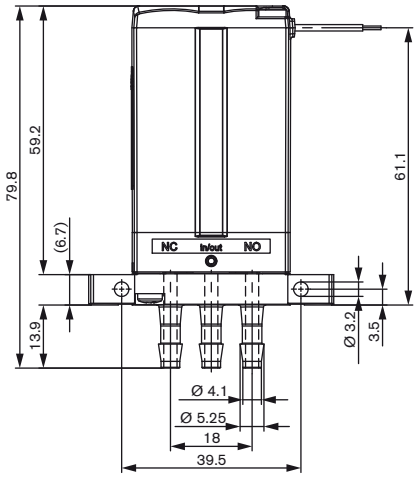

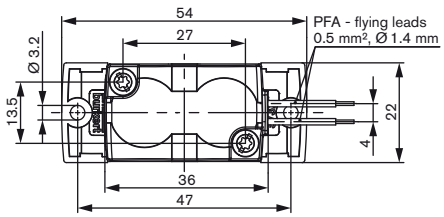

Push-in connector

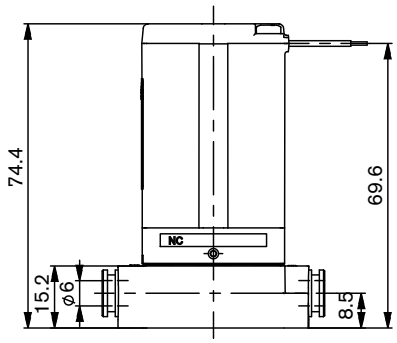

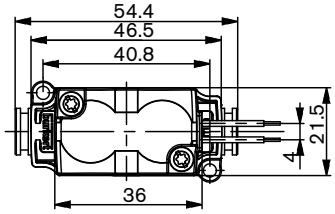

Classification of fluid connections

2/2-way-valve, normally closed (Circuit function A)
inflow at "NC"-connector

2/2-way-valve, normally open (Circuit function B)
inflow at "NO"-connector

3/2-way-valve , universal (Circuit function T)
flow as required

DTS 1000170656 EN Version: B Status: RL (released | freigegeben | validé) printed: 29.08.2013

Materials

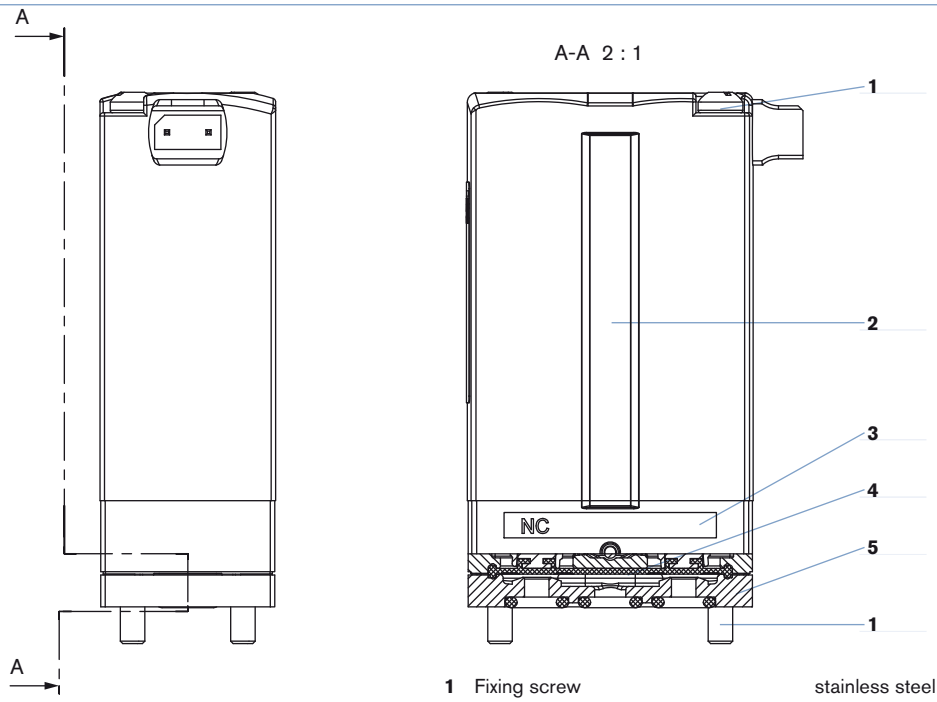

1	Fixing screw (from end-to-end)	stainless steel
2	Coil	EPOXY
3	Valve body	PPS
4	Diaphragm (Medium contact):	FFKM, on request FKM or EPDM
5	Fluid housing (Medium contact):	PEEK, on request PPS
6	Flange seal (Medium contact):	FFKM, on request FKM or EPDM

Application examples

Flying leads valve with plug-in coupling



Rectangular plug with hose connector



Flying leads valve with threaded body



Rectangular plug with manual override and flange



DTS 1000170656 EN Version: B Status: RL (released | freigegeben | validé) printed: 29.08.2013