Main switch 3P+N, mounting, padlock

Part no. DMM-160/3N/I5/P-R
Article no. 172791
Catalog No. DMM-160/3N/I5/P-R

Delivery programme

Product range			Switch-disconnectors Dumeco
Basic function			Main switches Maintenance switches Manual override switches
Part group reference			DMM
Protection type			IP20
Emergency switching OFF/ emergency STOP			as emergency switching off/ emergency stop function in CI-K5 enclosure With red rotary handle and yellow locking ring
Design			main switch surface mounting
Locking facility			1 padlock, Ø 5 mm
Contacts			auxiliary contact fitted by user
Main circuits Poles [M]			3 + N
Contact sequence			
Rated uninterrupted current	I_u	A	160

General

Standards			IEC/EN 60947, VDE 0660, IEC/EN 60204, CSA Switch-disconnector according to IEC/EN 60947-3
Certifications			CE, RoHs, KEMA, GOST-R, Lloyds
Ambient temperature		°C	
Operation	ϑ	°C	-25 - +55
Storage	ϑ	°C	-30 - +80
Overvoltage category/pollution degree			III/3
Rated impulse withstand voltage	U_{imp}	V AC	6000
Rated insulation voltage	U_i	V AC	1000
Mounting position			As required
Protection against direct contact when actuated from front (EN 50274)			Finger and back-of-hand proof

Contacts

Mechanical variables			
Main circuits Poles			3 + N
Electrical characteristics			
Rated operational voltage	U_e	V AC	690
Rated uninterrupted current	I_u	A	160
Note on rated uninterrupted current I_u			Rated uninterrupted current Iu is specified for max. cross-section.
Short-circuit rating			
fuse			125
Rated conditional short-circuit current	Iq	kA	50
Breaking current		kA	14.5
max. let-through energy		kA^2s	140

Rated short-time withstand current (1 s current)	I_{cw}	A_{rms}	2500
Note on rated short-time withstand current Icw			Current for a time of 1 second

Switching capacity

Bemessungsausschaltvermögen cos φ nach IEC 60947-3		A	
400/415 V		A	296
500 V		A	360
690 V		A	352
Safe isolation to EN 61140			
Current heat loss per contact at I_e		W	7.4
Lifespan, mechanical	Operations		10000
AC			
AC-21A			
Bemessungsbetriebsstrom Lastschalter			
400 V 415 V	I_e	A	160
500 V	I_e	A	160
690 V	I_e	A	160
AC-22A			
Bemessungsbetriebsstrom Lastschalter			
400 V 415 V	I_e	A	160
500 V	I_e	A	160
690 V	I_e	A	160
AC-23A			
Bemessungsbetriebsstrom Lastschalter			
400 V 415 V	I_e	A	66
500 V	I_e	A	66
690 V	I_e	A	40
Bemessungsbetriebsleistung AC-23A, 50 - 60 Hz	P	kW	
400 V 415 V	P	kW	37
500 V	P	kW	45
690 V	P	kW	40

Dimensions

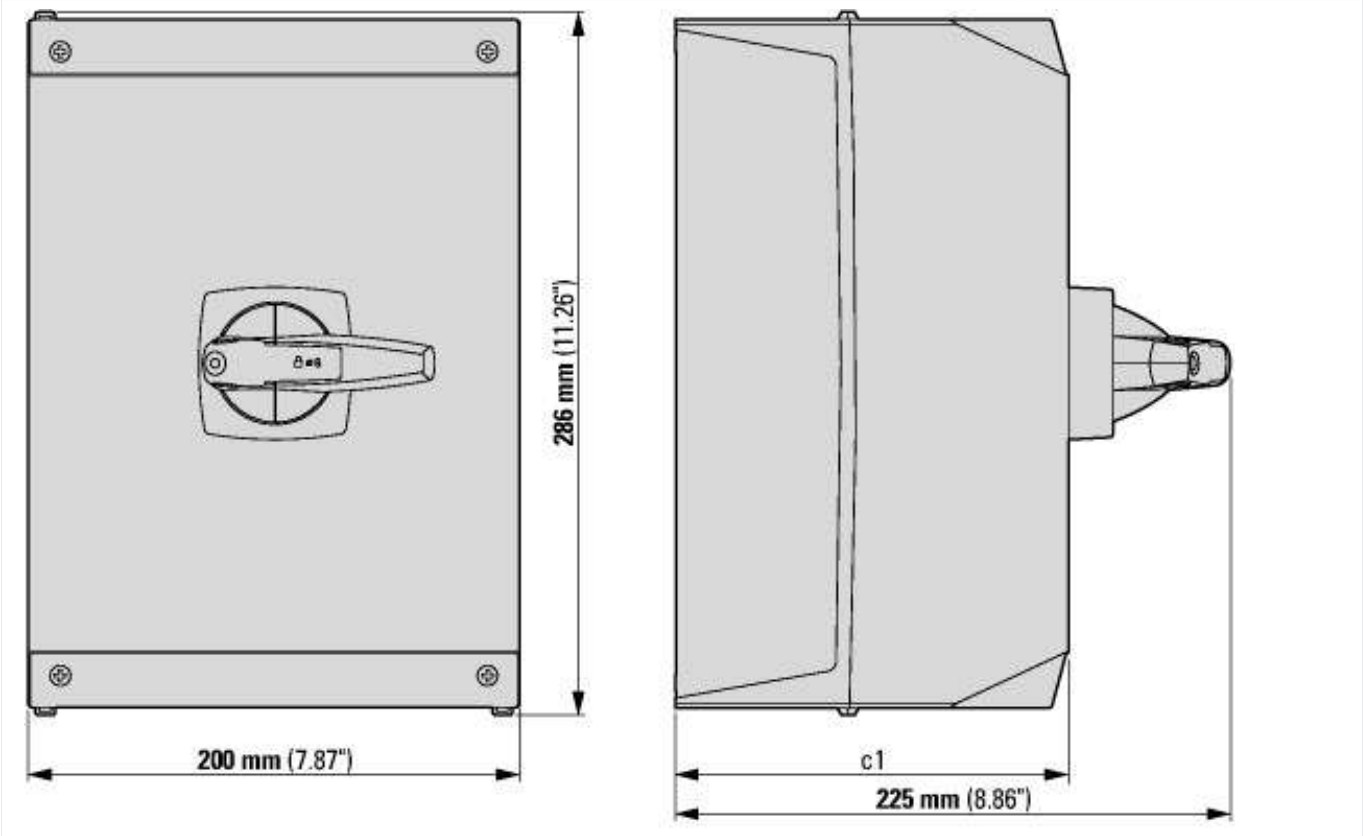

Additional product information (links)

http://de.ecat.moeller.net/flip-cat/?edition=HPLTEv1&startpage=4.2
http://de.ecat.moeller.net/flip-cat/?edition=HPLTEv1&startpage=4.4
http://de.ecat.moeller.net/flip-cat/?edition=HPLTEv1&startpage=4.6
http://de.ecat.moeller.net/flip-cat/?edition=HPLTEv1&startpage=4.8
http://de.ecat.moeller.net/flip-cat/?edition=HPLTEv1&startpage=4.8

© 12/2013 by Eaton Industries GmbH