E12253

Adapter plug

ESTGH050MSS00,5E05 (M16)

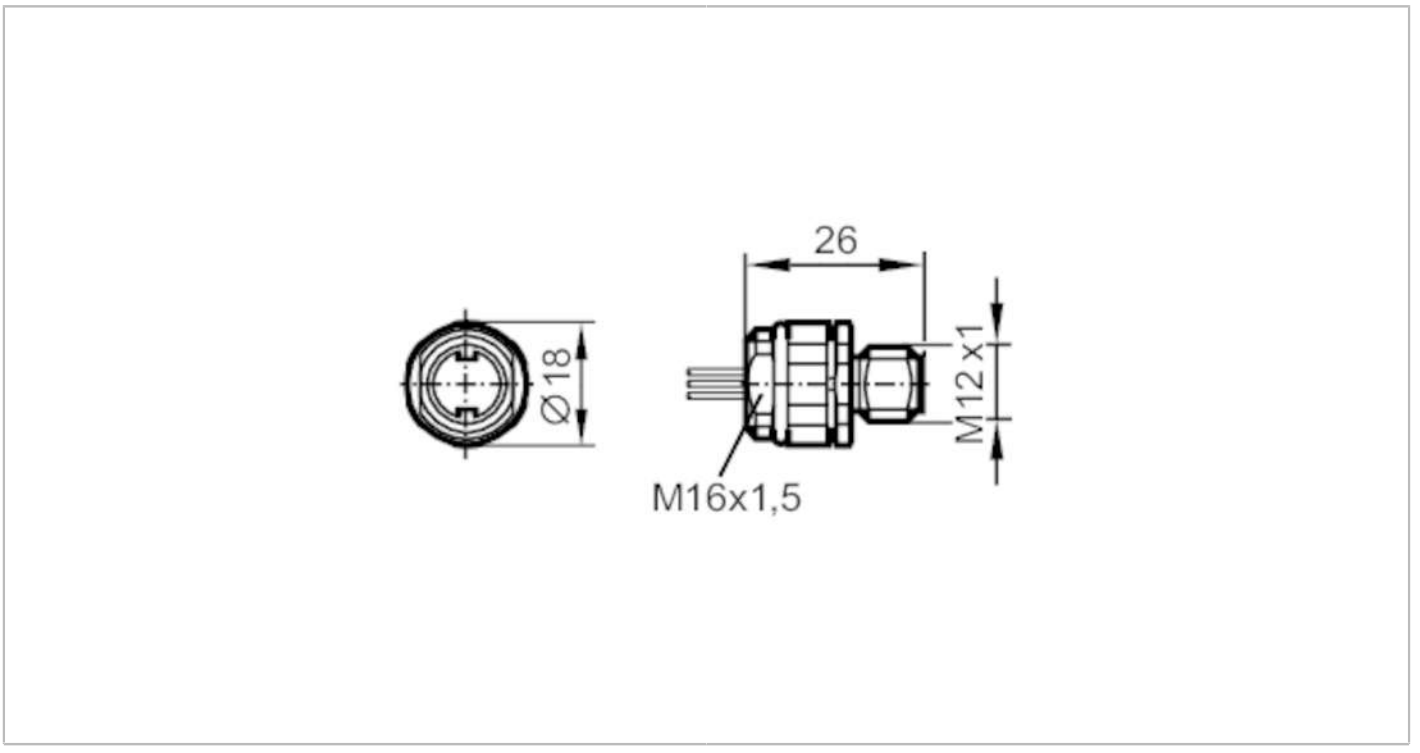

Electrical data		
Operating voltage	[V]	< 125 AC/DC
Operating conditions		
Ambient temperature	[°C]	-25...85
Protection		IP 68
Mechanical data		
Weight	[g]	23.1
Mounting thread		M16
Materials		diecast zinc nickel-plated
Moulded-body material		diecast zinc, nickel-plated
Remarks		
Pack quantity		1 pcs.
Electrical connection		

Cable: 0.5 m, PVC; 5 x 0.25 mm²

Electrical connection - plug

Connector: 1 x M12, straight; coding: A; Moulded body: diecast zinc, nickel-plated

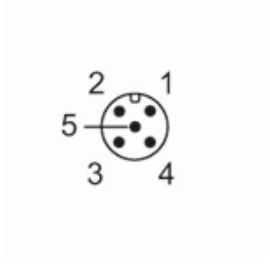

E12253

Adapter plug

ESTGH050MSS00,5E05 (M16)

Connection

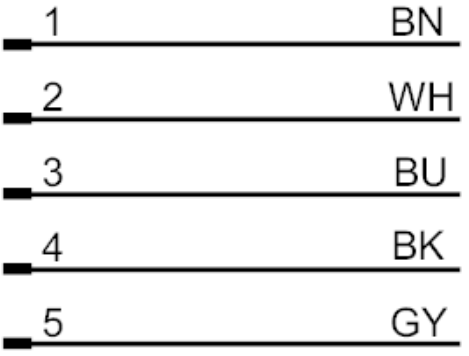

	Core colours :
BK =	black
BN =	brown
BU =	blue
GY =	grey
WH =	white