E19930

Mounting adapter for capacitive sensors

MOUNTING ADAPTER M30 PTFE

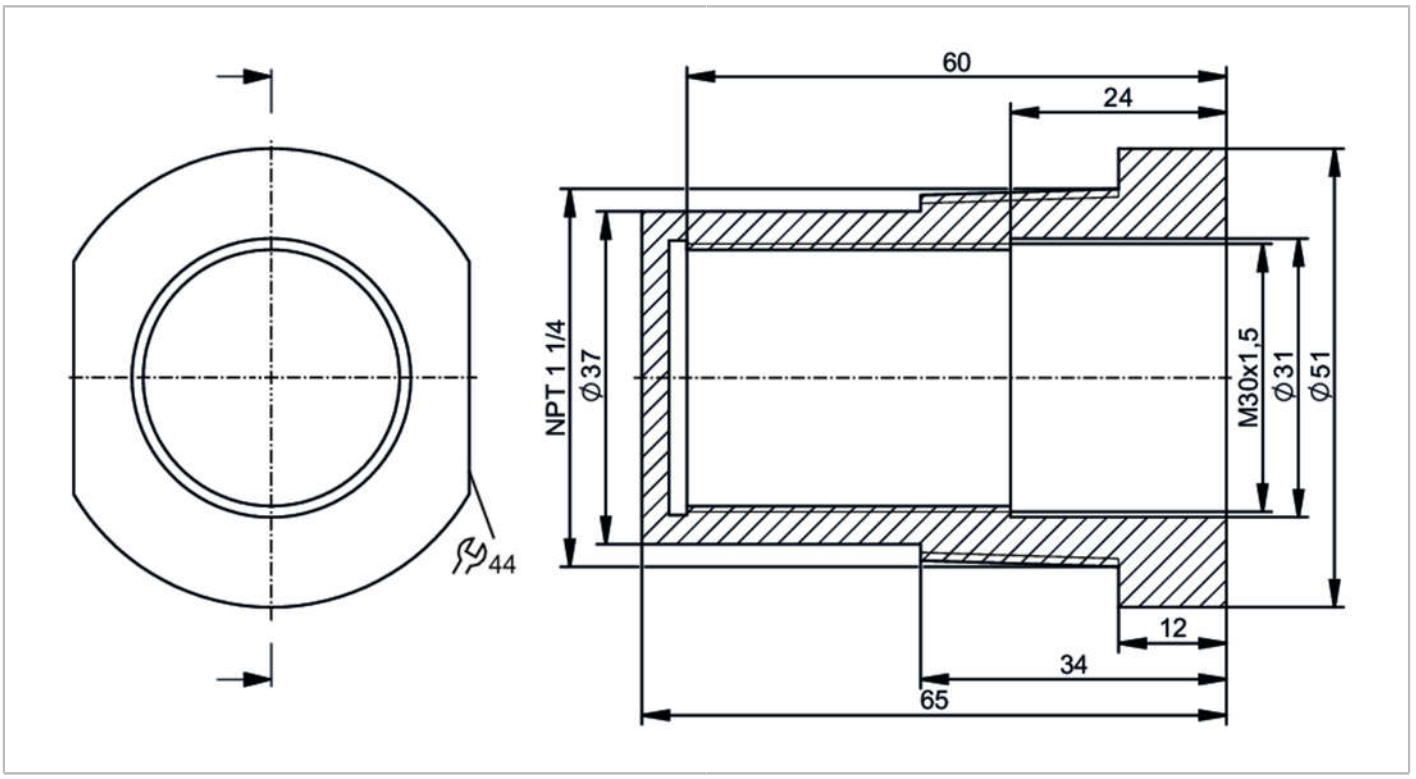

Application		
Design		for types M30
Mechanical data		
Weight	[g]	91.05
Materials		PTFE
Sensor connection		threaded connection M30 x 1,5 internal thread
Process connection		1 1/4" NPT
Remarks		
Pack quantity		1 pcs.