A2609040

ROUND KNOB 9, with line

Suitable for rotary potentiometer with round shaft ends according to DIN 41591. Collet system for convenient knob assembly from the front and simple adjustment (with adjustment key - sep. article). Center hole with chamfer. White marking.
Max. torque: assembly = 0.4 Nm, function = 0.4 Nm.

Supply
1 round knob



TECHNICAL DATA

Material	ABS (UL 94 HB)
Colour	black RAL 9005
Standards	RoHS compliant, REACH compliant

Diameter	9 mm
Height	14 mm
Bore hole	4 mm

Please take the dimensions from current parts. These are subject to material- and manufacturing-specific tolerances.

PURCHASING DATA

Weight/1 part	2.8 g
Customs tariff number (OKW product)	84879090
Country of manufacture	Germany

CUSTOMISING OPTIONS

A2609040

ROUND KNOB 9, with line

What else do you need to create your own personal product? We can supply our enclosures and tuning knobs fully modified to suit your electronic components and design requirements. Please advise for anything else we can do for you.

Customising options for A2609040



Machining



Printing



Installation / Assembly of accessories

A2609040

ROUND KNOB 9, with line

SYSTEM COMPONENTS TO COMPLETE



A4110000
Cover 10, without line
ABS (UL 94 HB)
black RAL 9005



A4110002
Cover 10, without line
ABS (UL 94 HB)
red RAL F12/0-10



A4110004
Cover 10, without line
ABS (UL 94 HB)
yellow RAL F12/0-1



A4110005
Cover 10, without line
ABS (UL 94 HB)
green RAL F12/0-43



A4110006
Cover 10, without line
ABS (UL 94 HB)
light blue RAL 5012



A4110007
Cover 10, without line
ABS (UL 94 HB)
pebble grey RAL 7032



A4110008
Cover 10, without line
ABS (UL 94 HB)
dusty grey RAL 7037



A4110100
Cover 10, with line
ABS (UL 94 HB)
black RAL 9005



A4110102
Cover 10, with line
ABS (UL 94 HB)
red RAL F12/0-10



A4110104
Cover 10, with line
ABS (UL 94 HB)
yellow RAL F12/0-1



A4110106
Cover 10, with line
ABS (UL 94 HB)
light blue RAL 5012



A4110108
Cover 10, with line
ABS (UL 94 HB)
dusty grey RAL 7037

Subject to technical modification without notice. © by OKW Gehäusesysteme, Buchen/Germany.

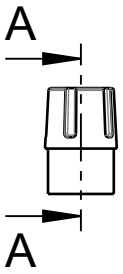

Schnitt A-A

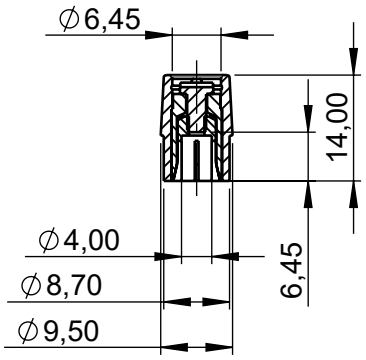





Bitte die Maße an aktuellen Teilen abnehmen.
Diese unterliegen material und produktionsspezifischen Fertigungstoleranzen

Please take the dimensions from current parts.
These are subject to material- and manufacutring-specific tolerances

Informationskopie
wird nicht aktualisiert
Copy for Information
will not be updated

Erst. am:	07.07.2023	Toleranzen:	Status:	
Erst. von:	J. Wiesbächer	DIN 16901 T130	ENTWICKLUNG	
Freig. am:		Volumen:	Zeichnungsart:	DIN 6 Teil 2
Freig. von:			KUNDE	
Revision:	01			

Technische Änderungen vorbehalten. Irrtümer oder Druckfehler begründen keinen Anspruch auf Schadenersatz. Wichtige Einbaumaße bitte direkt mit dem aktuellen Produkt abstimmen.

Subject to technical modification without prior notice. Typographical and other errors do not justify any claim for damages. All dimensions should be verified using an actual moulded part.

Sous reserve de modifications techniques. Toute erreur ou faute d'impression ne justife aucune demande d'indemnisation. Nous prions les clients de verifer les dimensions des composants avec les boitiers avant le montage.

OKW GEHÄUSE SYSTEME

This document contains proprietary information of OKW Gehäusesysteme GmbH and is tendered subject to the conditions that the information be retained in confidence not be reproduced or copied and not be used or incorporated in any product.

KOMBIKNOEPFE-SPANNZANGE 9
Rundknopf 09 mit Spannzange d= 4mm

A2609040

M 1:1

Für dieses Dokument behalten wir uns alle Urheberrechte vor. Es darf auch auszugsweise weder vervielfältigt noch Dritten in irgendeiner Form zugänglich gemacht werden.

Dateiname: 00029239