The new IRC relays

Button and lockable lever push-to-test, lift-to-lock

Mechanical and LED indication as standard

Coil voltage marked on the top of the relay

Marking label

Optional in-built suppressors circuits and bridge rectifier for AC/DC relays

Part number and technical information clearly visible on the side of relay

Isolation between contacts and coil, 5 KV

Coil input polarity protected (no polarity)

3 independents isolated zones: Coil, contacts and electronic circuits

Colour coded identification
AC: red
DC: blue
AC/DC: grey

Industrial terminal FASTON .



The new IRC sockets

Wire inlets, all in line

In-built retaining clip

DIN rail or panel mounting

Socket marking label

Industrial size screws and wire inlets to connect solid wire or ferrule tips up to 4 sq. mm.

Bridge bars for the coil lines

Bridge bars for the power lines

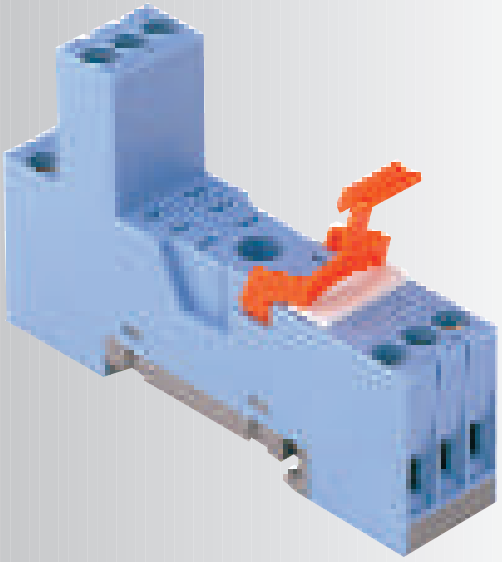

Depósito Legal M-40251-2004

RELECO, SA ▪ La Laguna, 30 ▪ E-28923 Alcorcón ▪ Madrid ▪ Phone: +34-91-641 60 12 ▪ Fax: +34-91-641 21 93 ▪ www.releco.com

THE NEW IRC FAMILY

10A 1 change-over contact



C10-A10X PAGE 8

10A 1 open contact



C10-G10X PAGE 9

6A 1 change-over contact



C10-T13X PAGE 10

6A 1 open contact



C10-GT13X PAGE 11

5A 2 change-over contacts



C12-A21X PAGE 12

5A 2 open contacts



C12-G21X PAGE 13

10A 1 change-over contact



C14-A10 PAGE 14

10A 1 open contact



C14-G10 PAGE 15

6A 1 change-over contact



C14-T13 PAGE 16

6A 1 open contact



C14-GT13 PAGE 17

5A 2 change-over contacts



C15-A21 PAGE 18

5A 2 open contacts



C15-G21 PAGE 19

2A 1 open contact



CSS-DCP PAGE 20

2A 1 open contact



CSS-DCN PAGE 21

3A 1 open contact



CSS-AC PAGE 22

3A 1 open contact



CSS-AZ PAGE 23

16A 1 change-over contact

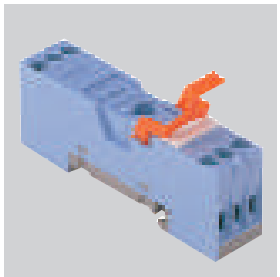

S10M PAGE 24

5A 2 change-over contacts

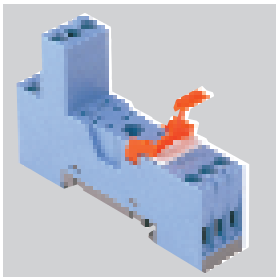

S12 PAGE 25

10A 1 change-over contact

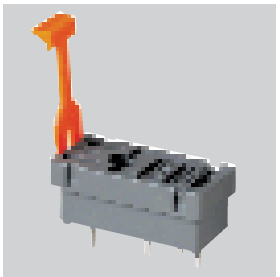

S10-P PAGE 26

5A 2 change-over contacts



S12-P PAGE 26

New I/O sockets, new IRC relays and new bridge bars allow more flexible, more economical and more aesthetic mounting, in interface and general application.

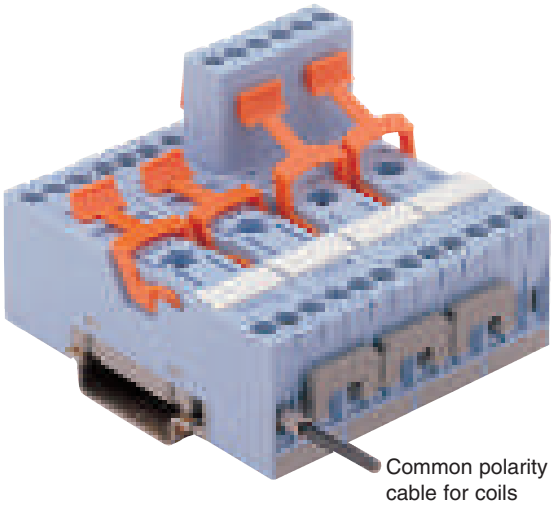

Common polarity cable for coils

S10-M and **S12** sockets of 1 and 2 contacts, with inlets in line and identical disposition of contacts set.

Identical sequence of coil and contacts on both sockets.
Coil terminal on level 1: (A2, A2, A1)
Contact terminals on level 1: (12, 11, 14)
Contact terminals on level 2: (22, 21, 24)

Bridge bars between A2 coil terminals with 2 free inlets to connect a commom polarity cable. Those bridges bars are isolated and divisible by hand, in single units.

Power bridges with current capacity of 40 A to be connected bewteen contacts 11 or 21 in any combination: Groups or battery of relays, to supply the power current to the loads.

Inlet terminals admit ferrule tips up to 4 mm^2.

Bridges in grey colour as standard.

Options:
Adopted colours by Releco used in the testing buttons of relays:
Blue, to identify DC circuits
Red, to identify AC circuits

B20 bridge bars for coils line

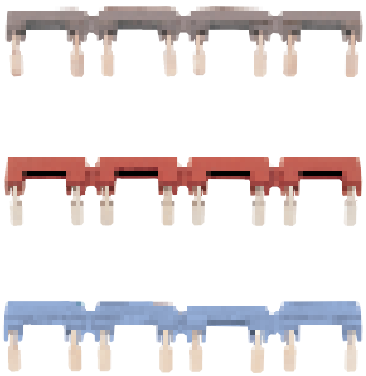

V40 and V10 bridge bars for power line

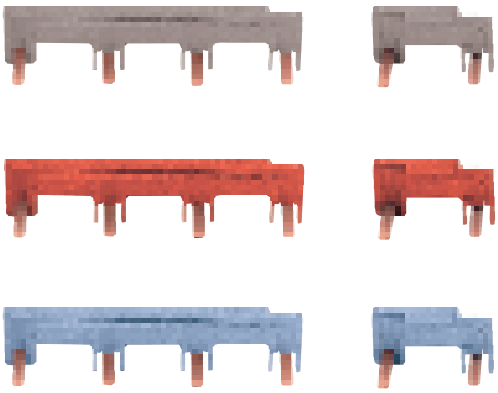

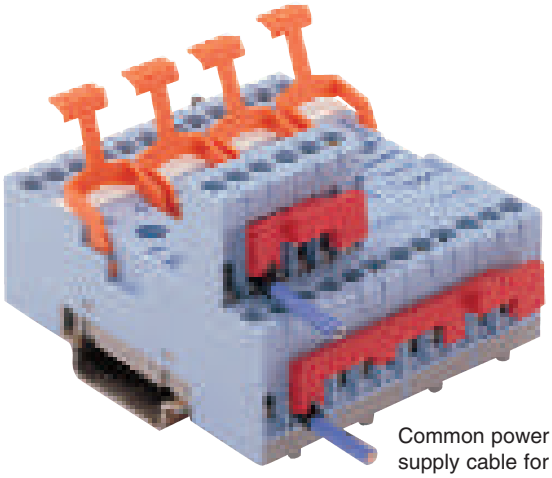

Common power supply cable for loads

RELECO, SA ▪ La Laguna, 30 ▪ E-28923 Alcorcón ▪ Madrid ▪ Phone: +34-91-641 60 12 ▪ Fax: +34-91-641 21 93 ▪ www.releco.com

Bridge bars connection on S10-M and S12 sockets

Examples of mounting. Not at scale

New S10-M and S12 sockets and new connection bridges B20, V10 and V40 permit an easy and quick wiring of relays in battery, in groups or in any other combination of voltages, coils or contacts.
Every bridge allows mounting with an hybrid configuration of S10-M and S12 sockets.
The immediate identification of the different circuits, means a lower mounting cost, inspection or maintenance.
Available in grey colour (standard), red (AC) and blue (DC), following the same colour coding adopted by Releco in testing buttons to identify its relays.

V40 bridge bars for power lines

These bridges allow joining common points in the power connection, usually the change-over contacts 11 or 21 on relays. They can be also used to bridge NC or NO terminals.
V40 bridges join four similar points in four aside adjacent sockets. They can join up either among themselves or to **V10** units, to bridge an unlimited number of sockets in any combination.
Made of copper with a current capacity of 40 A.

V10 bridge bars for power lines

V10 bridges are units to connect a single socket to the next one, so you bridge less or more than 4 socket, not being the final number a multiple of 4.

They can join up between themselves or to V40 units. Then, if you need to bridge five sockets, you can either use a V40 + 1 V10 or four V10 bridges.

Made of copper with a current capacity of 40 A.

It is necessary that the total sum of loads in a relay group, will not exceed the **maximum intensity of 40 A.,** permitted by the power bridges. If exceeded, the essential power cables must be added, to share the current and avoid overheating in the bridges. Every inlet terminal admit ferrule tips up to 4 sq. mm.

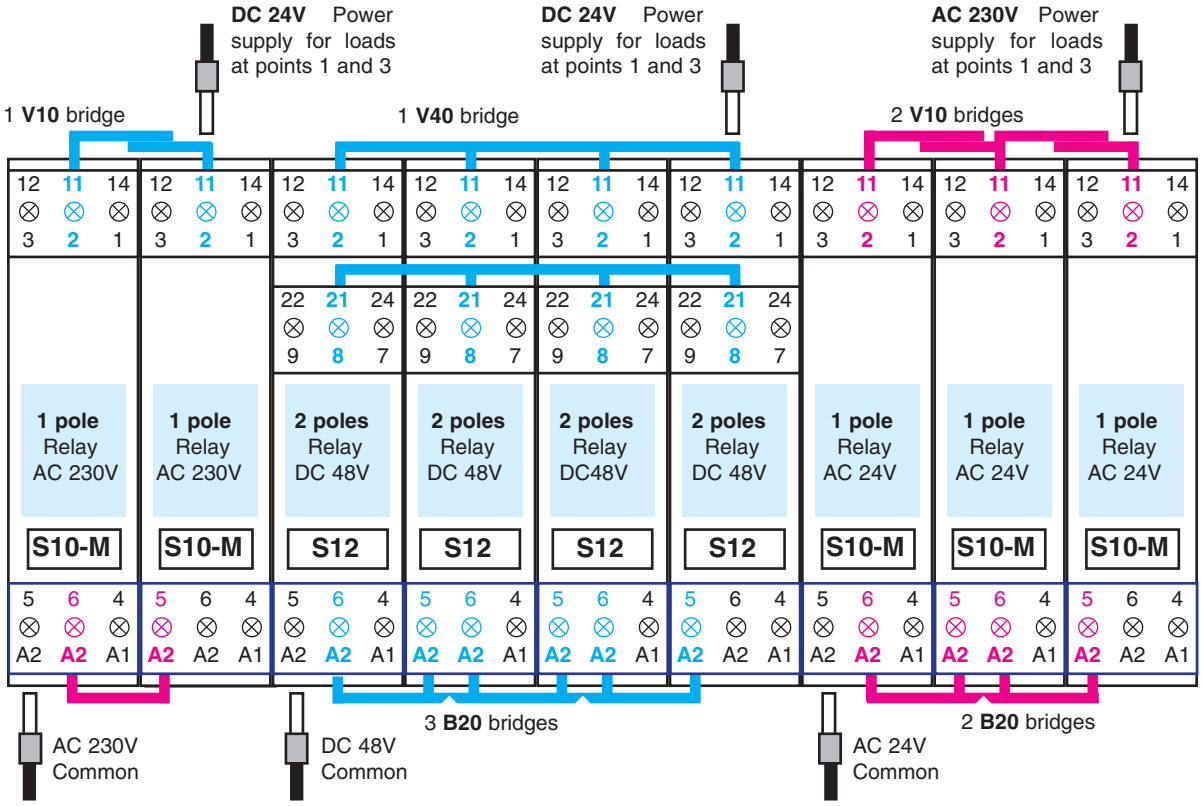

B20 bridge bars for coil lines

Both sockets are accessible to point A2 from terminals 5 and 6, internally connected. Each element connects point 6 of the first socket to point 5 of the next one, always leaving free the point 5 of the first socket and the point 6 of the last one, to connect the common polarity cable. Coils control voltage connect to points A1.
Bridge **B20** is composed by four units which can be divided in 1, 2 or 3 elements.

Solid state relays. How to mount as interface on PLC

Input
In every CSS relay, the input on terminals A1 and A2 is 5 ... 32 VDC, with no polarity.
If bridges to joint points A2 are used, a single voltage can be applied on terminals A1, for every relay, or different voltages within the range 5 .. 32 VDC.

Output DC or AC (independent relays)
When using "a single relay" of any model, load can be connected either on terminal 1 or terminal 2.

Relays with output on DC (CSS-DCP or CSS-DCN).
Range of voltage applied to the load will be 5 .. 50VDC.

Relays with output on AC, (CSS-AC, inductive loads, or CSS-AZ, resistive loads).
Range of voltage applied to the load will be 24 ... 250 VAC, 50/60 Hz.

Output on DC (relays in battery)
If power bridges are used with S10-M sockets in series of relays in line, it is necessary to attend the common polarity chosen to the loads connection.
Usually the point 2 (11 DIN) is the common point of the socket where positive tension is applied to the loads.
Then CSS-DCP relays must be connected where terminal 2 is common positive.
Said disposition complies Norm EN-60204-1-5,3,3 where "cutting every active element of its feeding" is suggested, that means to switch from the positive.

If point 2 of the socket is taken as negative, relays type CSS-DCN, where terminal 2 is negative must be connected

In what relays CSS-AC or CSS-AZ concerns, only whether load is inductive or resistive has to be considered, as they have no polarity.

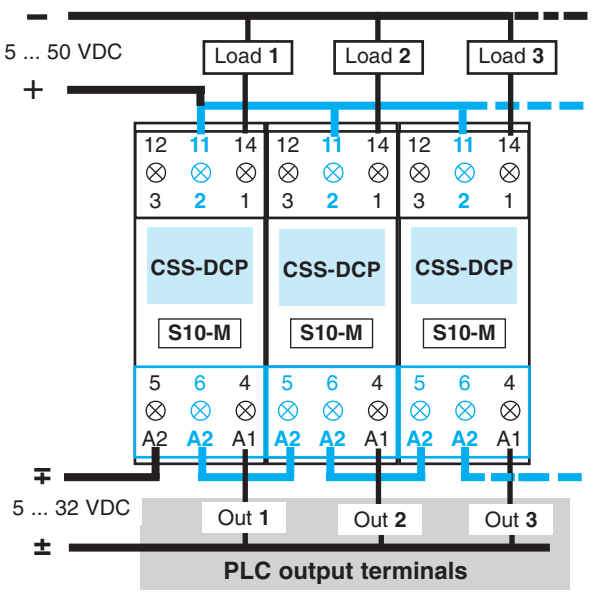

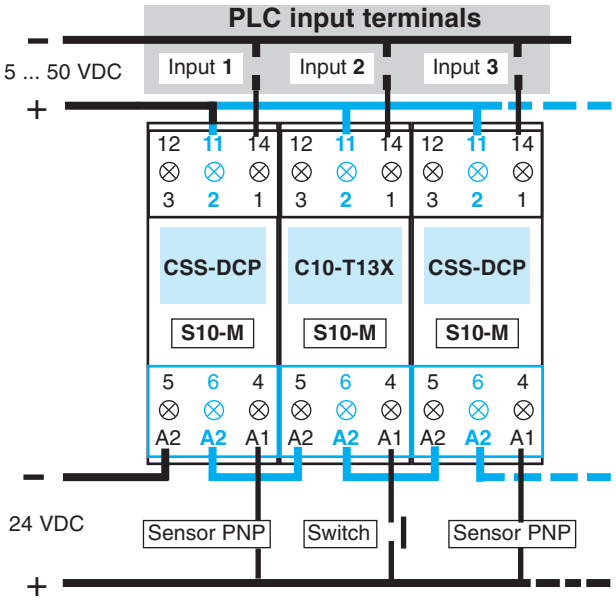

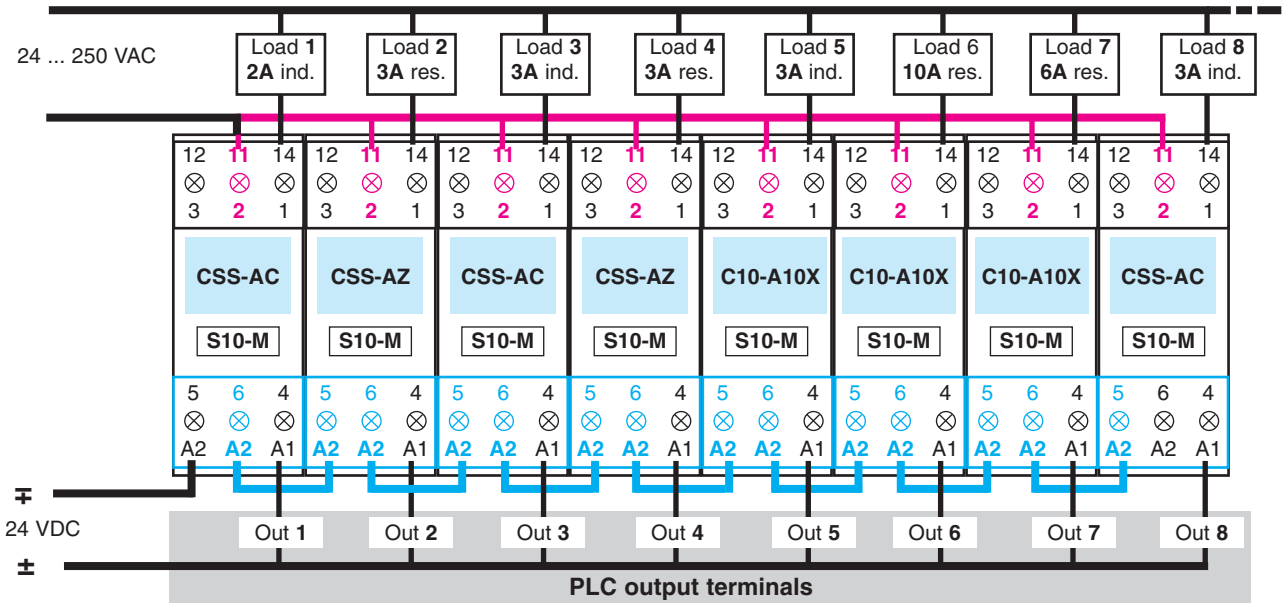

RELECO, SA ▪ La Laguna, 30 ▪ E-28923 Alcorcón ▪ Madrid ▪ Phone: +34-91-641 60 12 ▪ Fax: +34-91-641 21 93 ▪ www.releco.com

General information

A **Change-over contacts**
General application

0,5A @ 110VCC 0,2A @ 220VCC
Gap: 0,5 mm. Isolation between contacts: 1.000 V

G **Open contacts**
DC applications

0,8A @ 110VCC 0,4A @ 220VCC
Gap: 1 mm. Isolation between contacts: 2.000 V

T **Bifurcated contacts. Gold-plated 3µ Au**
Low level applications PLC´s input

.1mA @ 5VCC 0,5A @ 110VCC 0,2A @ 220VCC
Gap: 0,5 mm, Isolation between contacts: 1.000 V

Contacts

Either a long stock or polluted ambient may cause some surface oxidation of siver contacts or its alloys, by creating a thin surface film which may produce switching malfunction in low current and voltages.
To prevent that oxidation, using gold-plated contacts is recommended.

T relays standard contacts are gold-plated with 3µ Au and appropiate for weak current and signal input to PLC's.

Standard versions

Available standard types and all possible options are shown in pages reading technical specification of each model.

Types **C14-..** and **C15-..** do not allow any option for coil protection circuits.

Other types made according to customer specifications can be supplied, as special, and marked as RF Nº.....

Protection against pulses

When a relay coil is disconnected, reverse voltage peaks may arise and reach very high values. Said peaks can transmit to the coil associated line and other relays or semiconductors can be affected.

If triac, transistor, etc. controls a relay, appropiate steps must be taken to avoid or decrease peaks down to a non risky level.

Both Polarity and Free-Wheeling diodes (**FX**), must protect coils, to avoid malfunctions, provided DC relays in battery are installed.

Making or breaking engines, transformers or contactors in an industrial environmental, may generate high voltage pulses, either isolated or burst, through the main line. The voltage level of those pulse may be high enough to affect the isolation of the coil.

Specifications

Each relay specific data, refer to typical values measured at 20º C and new relays.

Electrical Life and Max. Load on DC tables show the tipical performance reached at an ambient temperature of 20º C and a frequency of 1.200 ops/hour.

Ambient temperature

Max. ambient temperature is -40º C ...+70º C, without ice, for a single relay. On close cabinets with several relays in battery inside, ambient temperature may exceed 70º C.
Sockets S10-M and S12, mounted aside, assures a free space between relays for heat dissipation.
But it could be necessary an adequate ventilation inside the cabinet.

Min. pull-in voltage

It is the minimum voltage that has to be applied to the coil, so the NO contacts close and the relay acts without vibration.
Given value of 0,8 x U_N ensures the relay works at a temperature of 20º C.

AC and DC relays pull-in voltage $\leq 0{,}8 \times U_N$
Pull-in voltage increases with coil temperature

Max. drop-out voltage

It is the voltage, higher that 0, at which the relay opens and the NC contacts close

DC relays drop-out voltage $\geq 0{,}10 \times U_N$
AC relays drop-out voltage $\geq 0{,}35 \times U_N$

Drop-out time on DC increases if diodes in antiparallel with the coil are connected

LED and protection circuits connected to coil

X LED with no polarity, (standard)
Coils $\leq$ 12 V CC y CA
LED rectifier bridge in parallel

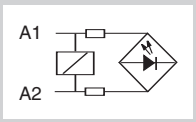

X LED with no polarity, (standard)
Coils $\geq$ 24V ... CC y CA
LED rectifier bridge in series

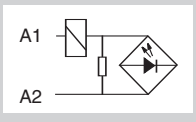

FX LED with polarity **A1+** (option)
Every DC coil voltage
Polarity and Free-wheeling diodes

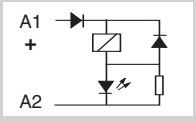

BX LED with no polarity, (option)
Only 24V and 48V ADC coils
Rectifier bridge for AC/DC relays

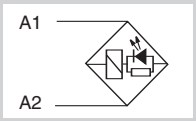

R LED not available (option)
Every AC coil voltage
RC protection against pulses on AC

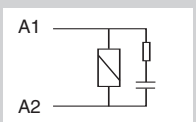



C10-A10X

One pole, changeover contact

10A 250V AC1 **0,5A 110V DC1**
10A 30V DC1 **0,2A 220V DC1**

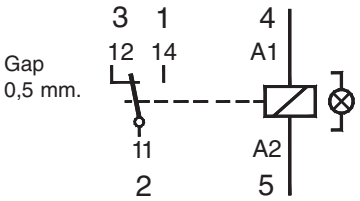

Table 1 Electrical life, ops x 10^6

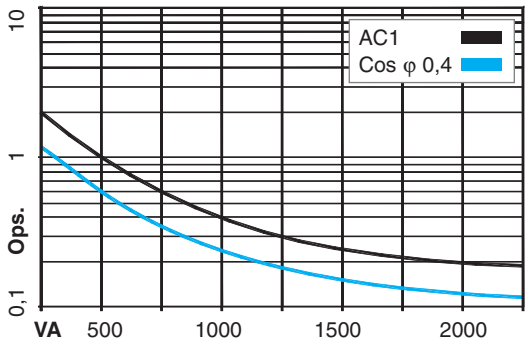

Table 2 Max. DC load

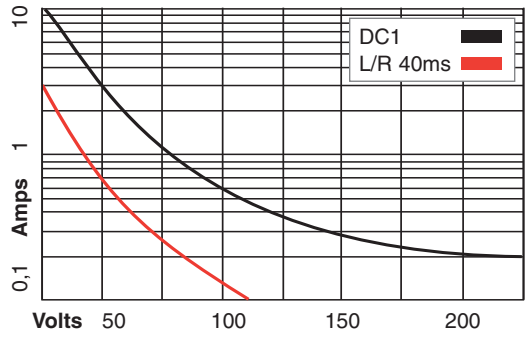

Dimensions mm.

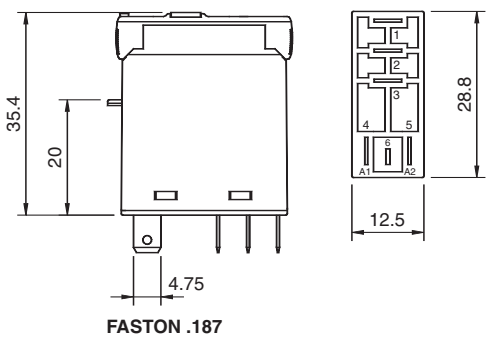

Contacts

Materials :	Standard, code **0**	AgNi
	Optional , code **8**	AgNi + 10µ Au
Max. switching current		10A
Max. peak inrush current (20 ms.)		30A
Max. switching voltage		250 V
Max. AC load (Table 1)		2,5 KVA
Max. DC load		See Table 2

Coils (Ohms ± 10% @ 20ºC)

Pull-in voltage	≤ 0,8 x **Un**
Drop-out voltage	≥ 0,1 x **Un**
Nominal coil power	1,1 VA (AC) / 0,7 W (DC)

Vac	Ω	mA	Vdc	Ω	mA
24	290	45	12	224	53
48	1.200	23	24	742	32
115	7.300	9,5	48	3.500	13,7
230	28.800	4,7	110	19.900	5,5

Insulation

Dielectric strength (1 minute):	
Open contacts	1.000 V
Between contacts and coil	5 KV
Isolation resistance at 500V	>3GΩ
Isolation, IEC 61810-5:	4 KV / 3

Specifications

Operate time + bounce time	10 ms.
Release time + bounce time	8 ms.
Ambient temperature	-40ºC (no ice) ... +70ºC
Mechanical life ops.	10 Mio. AC, 20 Mio. DC relays
Electrical life at nominal load	>100.000 ops.
Operating frequency at nominal load	1.200 / hour
Protection grade	IP40 / RT1
Weight avg.	21 gr.

Standard types

AC 50 Hz, (60 Hz): **24, 48, 115,** (120)**, 230,** (240)

X = **LED** (standard)	**C10-A10X ..... Vac**
RC supressor	**C10-A10R ..... Vac**
DC 12, 24, 48, 110	
X=**LED**, no polarity (standard)	**C10-A10X ..... Vdc**
Options (DC coils)	
Polarity and free wheeling diodes	**C10-A10FX ..... Vdc**
AC/DC bridge rectifier (24 or 48V)	**C10-A10BX ..... Vdc**

IEC 61810 EN 60947

RELECO, SA ▪ La Laguna, 30 ▪ E-28923 Alcorcón ▪ Madrid ▪ Phone: +34-91-641 60 12 ▪ Fax: +34-91-641 21 93 ▪ www.releco.com

RELECO



C10-G10X

CE

One pole, open contact

10A 250V AC1 **0,8A 110V DC1**
10A 30V DC1 **0,4A 220V DC1**

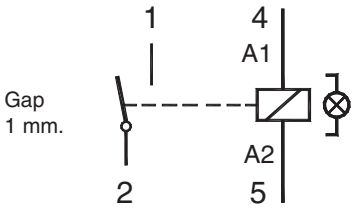

Table 1 Electrical life, ops x 10^6

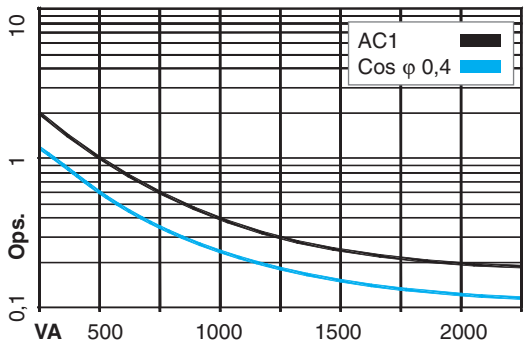

Table 2 Max. DC load

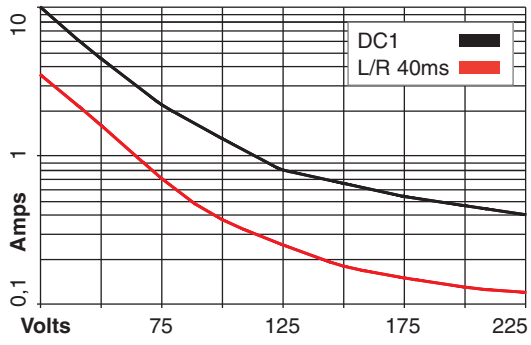

Dimensions mm.

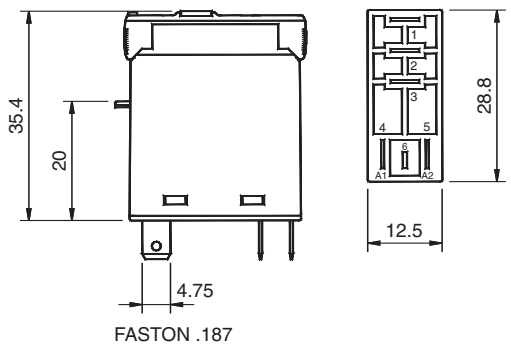

Contacts

Materials :	Standard, code **0**	AgNi
	Optional , code **8**	AgNi + 10µ Au
Max. switching current		10A
Max. peak inrush current (20 ms.)		30A
Max. switching voltage		250 V
Max. AC load (Table 1)		2,5 KVA
Max. DC load		See Table 2

Coils (Ohms ± 10% @ 20ºC)

Pull-in voltage	≤ 0,8 x **Un**
Drop-out voltage	≥ 0,1 x **Un**
Nominal coil power	1,1 VA (AC) / 0,7 W (DC)

Vac	Ω	mA	Vdc	Ω	mA
24	290	45	12	224	53
48	1.200	23	24	742	32
115	7.300	9,5	48	3.500	13,7
230	28.800	4,7	110	19.900	5,5

Insulation

Dielectric strength (1 minute):	
Open contacts	2.000 V
Between contacts and coil	5 KV
Isolation resistance at 500V	> 3GΩ
Isolation, IEC 61810-5:	4 KV / 3

Specifications

Operate time + bounce time	10 ms.
Release time + bounce time	8 ms.
Ambient temperature	-40ºC (no ice) ... +70ºC
Mechanical life ops.	10 Mio. AC, 20 Mio. DC relays
Electrical life at nominal load	>100.000 ops.
Operating frequency at nominal load	1.200 / hour
Protection grade	IP40 / RT1
Weight avg.	21 gr.

Standard types

AC 50 Hz, (60 Hz): **24, 48, 115,** (120)**, 230,** (240)

X = **LED** (standard)	**C10-G10X ..... Vac**
RC supressor	**C10-G10R .... Vac**

DC 12, 24, 48, 110

X=LED, no polarity (standard)	**C10-G10X ..... Vdc**
Opciones (DC coils)	
Polarity and free wheeling diodes	**C10-G10FX ..... Vdc**
AC/DC bridge rectifier (24 or 48V)	**C10-G10BX .....Vdc**

cULus IEC 61810 EN 60947



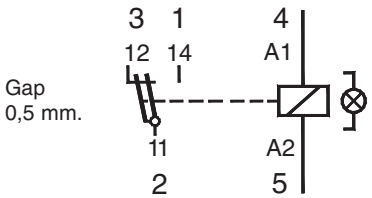

C10-T13X

One change-over twin contact

6A 250V AC1 **0,5A 110V DC1**
6A 30V DC1 **0,2A 220V DC1**

Contacts

Materials : Standard, code 3	AgNi + 3µ Au
Optional , code 2	AgNi + 10µ Au
Max. switching current	6 A
Max. peak inrush current (20 ms.)	15 A
Max. switching voltage	250 V
Max. AC load (Table 1)	1,5 KVA
Max. DC load	See Table 2

Coils (Ohms ± 10% @ 20ºC)

Pull-in voltage	≤ 0,8 x **Un**
Drop-out voltage	≥ 0,1 x **Un**
Nominal coil power	1,1 VA (AC) / 0,7 W (DC)

Vac	Ω	mA	Vdc	Ω	mA
24	290	45	12	224	53
48	1.200	23	24	742	32
115	7.300	9,5	48	3.500	13,7
230	28.800	4,7	110	19.900	5,5

Insulation

Dielectric strength (1 minute):	
Open contacts	1.000 V
Between contacts and coil	5 KV
Isolation resistance at 500V	> 3GΩ
Isolation, IEC 61810-5:	4 KV / 3

Specifications

Operate time + bounce time	10 ms.
Release time + bounce time	8 ms.
Ambient temperature	-40ºC (no ice) ... +70ºC
Mechanical life ops.	10 Mio. AC relays, 20 Mio. DC relays
Electrical life at nominal load	>100.000 ops.
Operating frequency at nominal load	1.200 / hour
Protection grade	IP40 / RT1
Weight avg.	21 gr.

Standard types

AC 50 Hz, (60 Hz): **24, 48, 115,** (120)**, 230,** (240)

X = **LED** (standard)	**C10-T13X ..... Vac**
RC supressor	**C10-T13R ..... Vac**
DC 12, 24, 48, 110	
X=LED, no polarity (standard)	**C10-T13X ..... Vdc**
Opciones (DC coils)	
Polarity and free wheeling diodes	**C10-T13FX ..... Vdc**
AC/DC bridge rectifier (24 y 48V)	**C10-T13BX ..... Vdc**

IEC 61810 EN 60947

Table 1 Electrical life, ops x 10^6

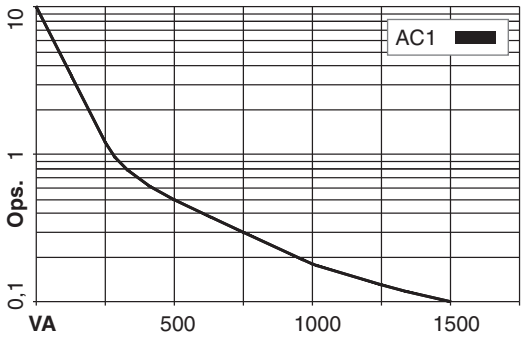

Table 2 Max. DC load

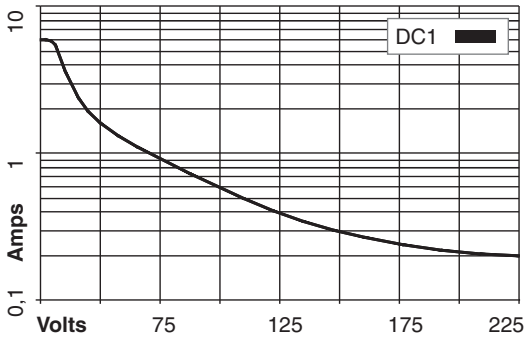

Dimensions mm

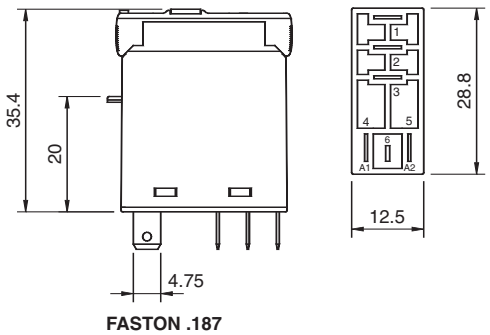

RELECO



C10-GT13X

CE

One pole, twin open contact

6A 250V AC1 **0,8A 110V DC1**
6A 30V DC1 **0,4A 220V DC1**

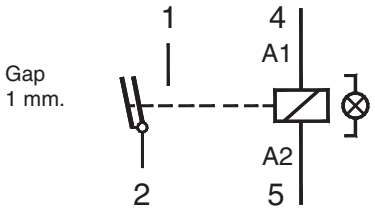

Contacts

Materials :	Standard, code **3**	AgNi + 3µ Au
	Optional , code **2**	AgNi + 10µ Au
Max. switching current		6 A
Max. peak inrush current (20 ms.)		15 A
Max. switching voltage		250 V
Max. AC load (Table 1)		1,5 KVA
Max. DC load		See Table 2

Coils (Ohms ± 10% @ 20ºC)

Pull-in voltage	≤ 0,8 x **Un**
Drop-out voltage	≥ 0,1 x **Un**
Nominal coil power	1,1 VA (AC) / 0,7 W (DC)

Vac	Ω	mA	Vdc	Ω	mA
24	290	45	12	224	53
48	1.200	23	24	742	32
115	7.300	9,5	48	3.500	13,7
230	28.800	4,7	110	19.900	5,5

Insulation

Dielectric strength (1 minute):	
Open contacts	2.000 V
Between contacts and coil	5 KV
Isolation resistance at 500V	>3GΩ
Isolation, IEC 61810-5:	4 KV / 3

Specifications

Operate time + bounce time	10 ms.
Release time + bounce time	8 ms.
Ambient temperature	-40ºC (no ice) ... +70ºC
Mechanical life ops.	10 Mio. AC relays, 20 Mio. DC relays
Electrical life at nominal load	>100.000 ops.
Operating frequency at nominal load	1.200 / hour
Protection grade	IP40 / RT1
Weight avg.	21 gr.

Standard types

AC 50 Hz, (60 Hz): **24, 48, 115,** (120)**, 230,** (240)

X = **LED** (standard)	**C10-GT13X ..... Vac**
RC supressor	**C10-GT13R ..... Vac**

T

DC 12, 24, 48, 110

X=LED, no polarity (standard)	**C10-GT13X ..... Vdc**

Opciones (DC coils)

Polarity and free wheeling diodes	**C10-GT13FX ..... Vdc**
AC/DC bridge rectifier (24 or 48V)	**C10-GT13BX ..... Vdc**

cULus IEC 61810 EN 60947

Table 1 Electrical life, ops x 10^6

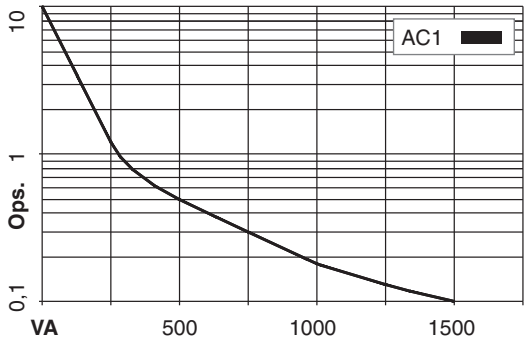

Table 2 Max. DC load

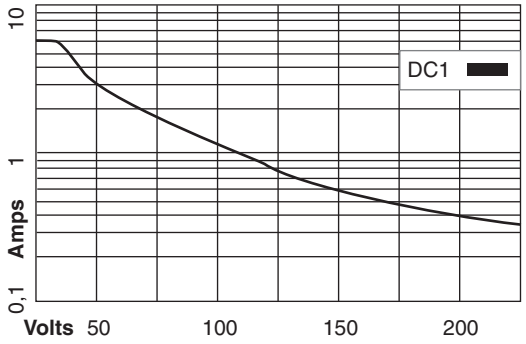

Dimensions mm.

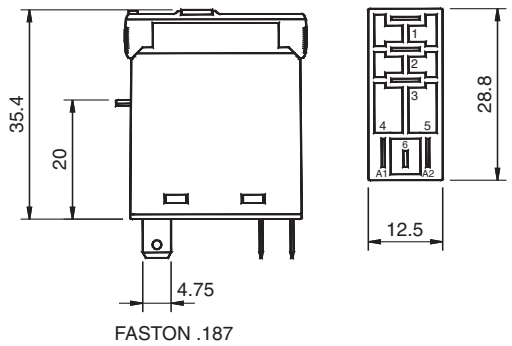



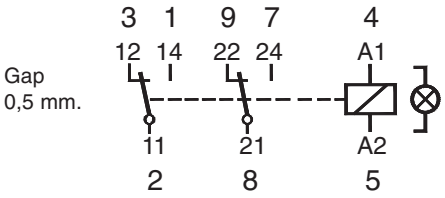

C12-A21X

CE

Two poles, change-over contacts

5A 250V AC1 **0,5A 110V DC1**
5A 30V DC1 **0,2A 220V DC1**

Contacts

Materials : Standard, code **1**	AgNi + 0,3µ Au
Optional , code **2**	AgNi + 10µ Au
Max. switching current	5 A
Max. peak inrush current (20 ms.)	15 A
Max. switching voltage	250 V
Max. AC load (Table 1)	1,2 KVA
Max. DC load	See Table 2

Coils (Ohms ± 10% @ 20ºC)

Pull-in voltage	≤ 0,8 x **Un**
Drop-out voltage	≥ 0,1 x **Un**
Nominal coil power	1,1 VA (AC) / 0,7 W (DC)

Vac	Ω	mA	Vdc	Ω	mA
24	290	45	12	224	53
48	1.200	23	24	742	32
115	7.300	9,5	48	3.500	13,7
230	28.800	4,7	110	19.900	5,5

Insulation

Dielectric strength (1 minute): Open contacts	1.000 V
Between adjacents poles	3.000 V
Between contacts and coil	5 KV
Isolation resistance at 500V	>3GΩ
Isolation, IEC 61810-5:	4 KV / 3

Specifications

Operate time + bounce time	10 ms.
Release time + bounce time	8 ms.
Ambient temperature	-40ºC (no ice) ... +70ºC
Mechanical life ops.	10 Mio. AC relays, 20 Mio. DC relays
Electrical life at nominal load	>100.000 ops.
Operating frequency at nominal load	1.200 / hour
Protection degree	IP40 / RT1
Weight avg.	21 gr.

Standard types

AC 50 Hz, (60 Hz): **24, 48, 115,** (120)**, 230,** (240)

X = **LED** (standard)	**C12-A21X ..... Vac**
RC supressor	**C12-A21R ..... Vac**

DC 12, 24, 48, 110

X=LED, no polarity (standard)	**C12-A21X ..... Vdc**
Options (DC coils)	
Polarity and free wheeling diodes	**C12-A21FX ..... Vdc**
AC/DC bridge rectifier (24 or 48V)	**C12-A21BX ..... Vdc**

cULus IEC 61810 EN 60947

Table 1 Electrical life, ops x 10^6

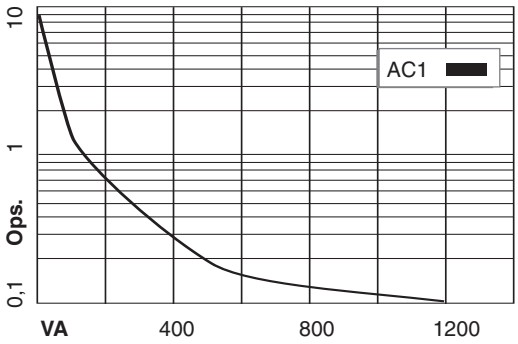

Table 2 Max. DC load

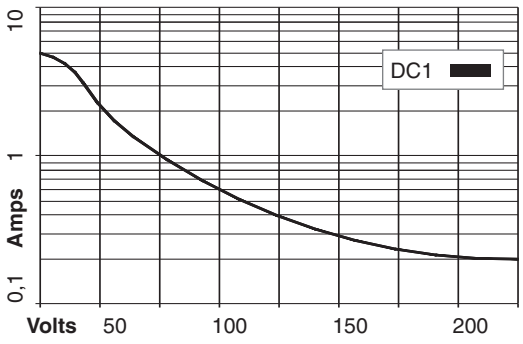

Dimensions mm.

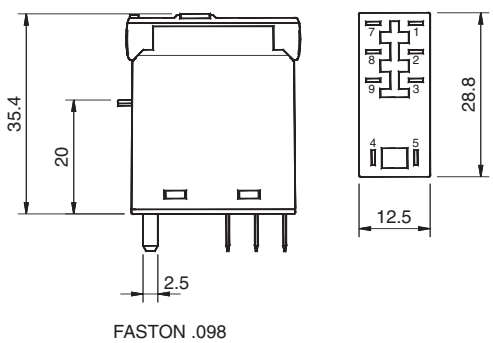

FASTON .098

RELECO



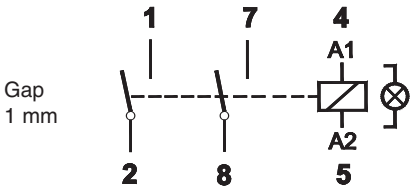

C12-G21X

CE

Two poles, open contacts

5A 250V AC1 **0,8A 110V DC1**
5A 30V DC1 **0,4A 220V DC1**

Contacts

Materials :	Standard, code **1**	AgNi + 0,3µ Au
	Optional , code **2**	AgNi + 10µ Au
Max. switching current		5 A
Max. peak inrush current (20 ms.)		15 A
Max. switching voltage		250 V
Max. AC load (Table 1)		1,2 KVA
Max. DC load		See Table 2

Coils (Ohms ± 10% @ 20ºC)

Pull-in voltage	≤ 0,8 x **Un**
Drop-out voltage	≥ 0,1 x **Un**
Nominal coil power	1,1 VA (AC) / 0,7 W (DC)

Vac	Ω	mA	Vdc	Ω	mA
24	290	45	12	224	53
48	1.200	23	24	742	32
115	7.300	9,5	48	3.500	13,7
230	28.800	4,7	110	19.900	5,5

Insulation

Dielectric strength (1 minute): Open contacts	2.000 V
Between adjacents poles	3.000 V
Between contacts and coil	5 KV
Isolation resistance at 500V	>3GΩ
Isolation, IEC 61810-5:	4 KV / 3

Specifications

Operate time + bounce time	10 ms.
Release time + bounce time	8 ms.
Ambient temperature	-40ºC (no ice) ... +70ºC
Mechanical life ops.	10 Mio. AC, 20 Mio. DC relays
Electrical life at nominal load	>100.000 ops.
Operating frequency at nominal load	1.200 / hour
Protection grade	IP40 / RT1
Weight avg.	21 gr.

Standard types

AC 50 Hz, (60 Hz): **24, 48, 115,** (120)**, 230,** (240)

X = **LED** (standard)	**C12-G21X ..... Vac**
RC supressor	**C12-G21R ..... Vac**

DC 12, 24, 48, 110

X=LED, no polarity (standard)	**C12-G21X ..... Vdc**
Options (DC coils)	
Polarity and free wheeling diodes	**C12-G21FX ..... Vdc**
AC/DC bridge rectifier (24 or 48V)	**C12-G21BX .... Vdc**

cULus IEC 61810 EN 60947

Table 1 Electrical life, ops x 10^6

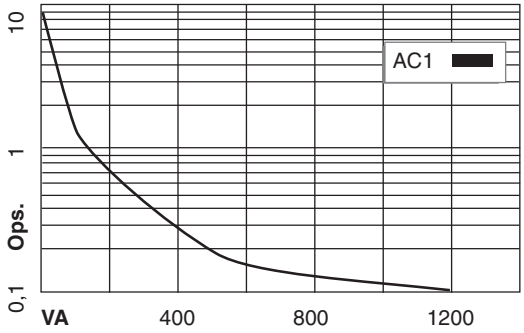

Table 2 Max. DC load

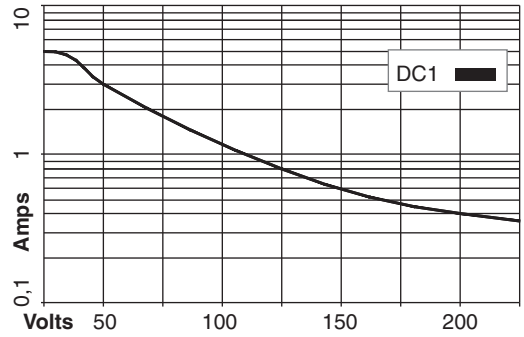

Dimensions mm.

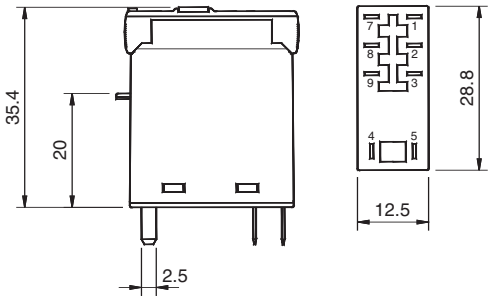

FASTON .098



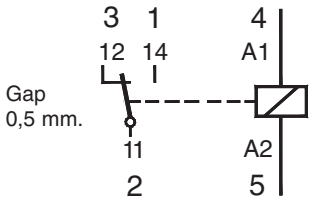

C14-A10

CE

One pole, changeover contact

10A 250V AC1 **0,5A 110V DC1**
10A 30V DC1 **0,2A 220V DC1**

Contacts

Materials : Standard, code **0**	AgNi
Optional , code **8**	AgNi + 10µ Au
Max. switching current	10A
Max. peak inrush current (20 ms.)	30A
Max. switching voltage	250 V
Max. AC load (Table 1)	2,5 KVA
Max. DC load	See Table 2

Coils (Ohms ± 10% @ 20ºC)

Pull-in voltage	≤ 0,8 x **Un**
Drop-out voltage	≥ 0,1 x **Un**
Nominal coil power	1,1 VA (AC) / 0,7 W (DC)

Vac	Ω	mA	Vdc	Ω	mA
24	290	45	12	224	53
48	1.200	23	24	742	32
115	7.300	9,5	48	3.500	13,7
230	28.800	4,7	110	19.900	5,5

Insulation

Dielectric strength (1 minute):	
Open contacts	1.000 V
Between contacts and coil	5 KV
Isolation resistance at 500V	>3GΩ
Isolation, IEC 61810-5:	4 KV / 3

Specifications

Operate time + bounce time	10 ms.
Release time + bounce time	8 ms.
Ambient temperature	-40ºC (no ice) ... +70ºC
Mechanical life ops.	10 Mio. AC, 20 Mio. DC relays
Electrical life at nominal load	>100.000 ops.
Operating frequency at nominal load	1.200 / hour
Protection grade	IP40 / RT1
Weight avg.	21 gr.

Standard types

AC 50 Hz, (60 Hz): **24, 48, 115,** (120)**, 230,** (240)

DC 12, 24, 48, 110

C14-A10 ..... Vac

C14-A10 ..... Vdc

The small size of type C14 ... does not allow to carry LED nor mechanical indication, nor testing button.

IEC 61810 EN 60947

Table 1 Electrical life, ops x 10^6

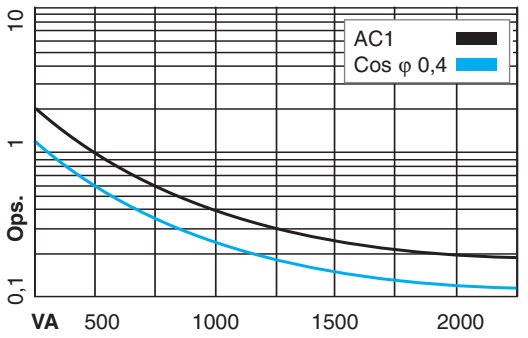

Table 2 Max. DC load

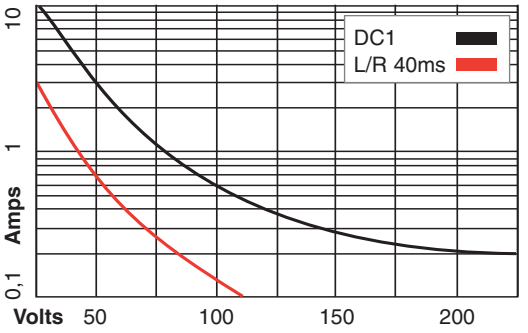

Dimensions mm.

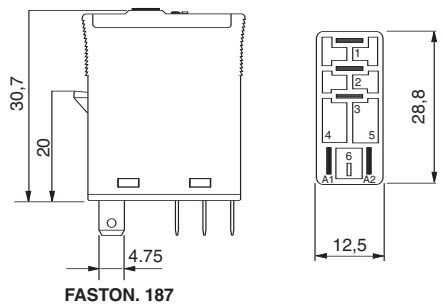

RELECO



C14-G10

CE

One open contact

10A 250V AC1 **0,8A 110V DC1**
10A 30V DC1 **0,4A 220V DC1**

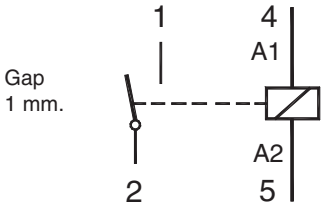

Table 1 Electrical life, ops x 10^6

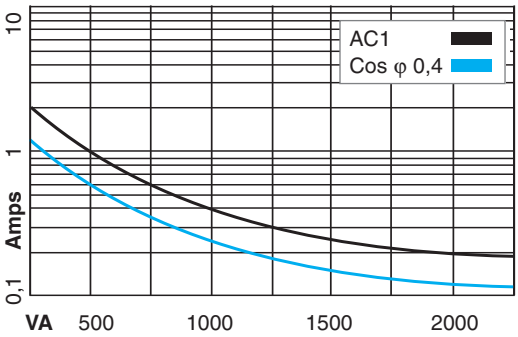

Table 2 Max. DC load

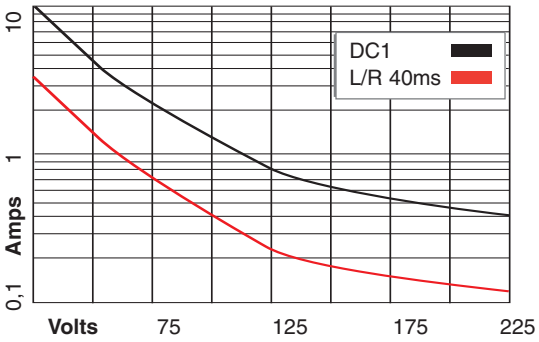

Dimensions mm.

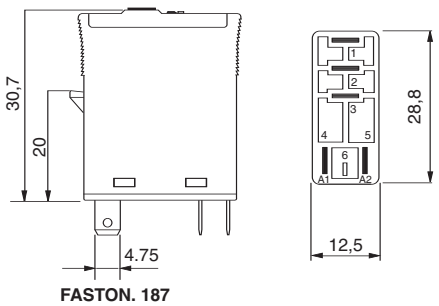

Contacts

Materials : Standard, code **0**	AgNi
Optional , code **8**	AgNi + 10µ Au
Max. switching current	10A
Max. peak inrush current (20 ms.)	30A
Max. switching voltage	250 V
Max. AC load (Table 1)	2,5 KVA
Max. DC load	See Table 2

Coils (Ohms ± 10% @ 20ºC)

Pull-in voltage	≤ 0,8 x **Un**
Drop-out voltage	≥ 0,1 x **Un**
Nominal coil power	1,1 VA (AC) / 0,7 W (DC)

Vac	Ω	mA	Vdc	Ω	mA
24	290	45	12	224	53
48	1.200	23	24	742	32
115	7.300	9,5	48	3.500	13,7
230	28.800	4,7	110	19.900	5,5

Insulation

Dielectric strength (1 minute):	
Open contacts	2.000 V
Between contacts and coil	5 KV
Isolation resistance at 500V	>3GΩ
Isolation, IEC 61810-5:	4 KV / 3

Specifications

Operate time + bounce time	10 ms.
Release time + bounce time	8 ms.
Ambient temperature	-40ºC (no ice) ... +70ºC
Mechanical life ops.	10 Mio. AC, 20 Mio. DC relays
Electrical life at nominal load	>100.000 ops.
Operating frequency at nominal load	1.200 / hour
Protection degree	IP40 / RT1
Weight avg.	21 gr.

Standard types

AC 50 Hz, (60 Hz): **24, 48, 115,** (120)**, 230,** (240)

DC 12, 24, 48, 110

C14-G10 ..... Vac

C14-G10 ..... Vdc

The small size of type C14 ... does not allow to carry LED nor mechanical indication, nor testing button.

cULus IEC 61810 EN 60947



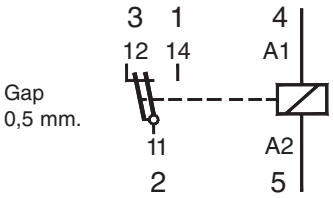

C14-T13

One change-over twin contact

6A 250V AC1 **0,5A 110V DC1**
6A 30V DC1 **0,2A 220V DC1**

Contacts

Materials :	Standard, code **3**	AgNi + 3µ Au
	Optional , code **2**	AgNi + 10µ Au
Max. switching current		6 A
Max. peak inrush current (20 ms.)		15 A
Max. switching voltage		250 V
Max. AC load (Table 1)		1,5 KVA
Max. DC load		See Table 2

Coils (Ohms ± 10% @ 20ºC)

Pull-in voltage	≤ 0,8 x **Un**
Drop-out voltage	≥ 0,1 x **Un**
Nominal coil power	1,1 VA (AC) / 0,7 W (DC)

Vac	Ω	mA	Vdc	Ω	mA
24	290	45	12	224	53
48	1.200	23	24	742	32
115	7.300	9,5	48	3.500	13,7
230	28.800	4,7	110	19.900	5,5

Insulation

Dielectric strength (1 minute):	
Open contacts	1.000 V
Between contacts and coil	5 KV
Isolation resistance at 500V	> 3GΩ
Isolation, IEC 61810-5:	4 KV / 3

Specifications

Operate time + bounce time	10 ms.
Release time + bounce time	8 ms.
Ambient temperature	-40ºC (no ice) ... +70ºC
Mechanical life ops.	10 Mio. AC, 20 Mio. DC relays
Electrical life at nominal load	>100.000 ops.
Operating frequency at nominal load	1.200 / hour
Protection grade	IP40 / RT1
Weight avg.	21 gr.

Table 1 Electrical life, ops x 10^6

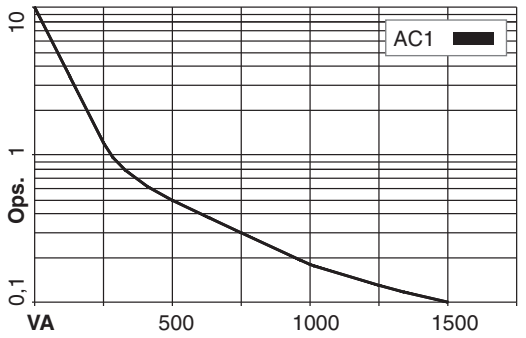

Table 2 Max. DC load

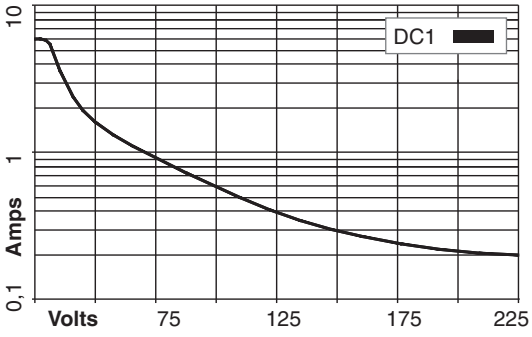

Dimensions mm.

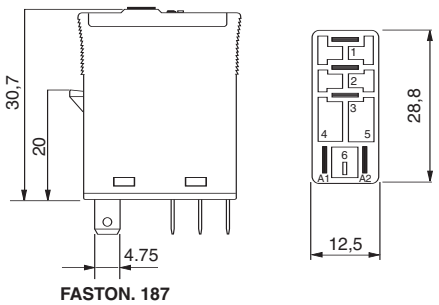

Standard types

AC 50 Hz, (60 Hz): **24, 48, 115,** (120), **230,** (240)

DC 12, 24, 48, 110

C14-T13 ..... Vac

C14-T13 ..... Vdc

The small size of type C14 ... does not allow to carry LED nor mechanical indication, nor testing button.

IEC 61810 EN 60947

RELECO



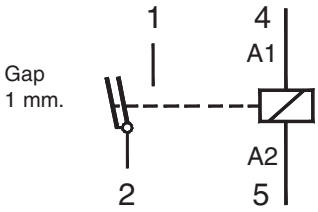

C14-GT13

CE

One pole, twin open contact

6A 250V AC1 **0,8A 110V DC1**
6A 30V DC1 **0,4A 220V DC1**

Contacts

Materials :	Standard, code **3**	AgNi + 3µ Au
	Optional , code **2**	AgNi + 10µ Au
Max. switching current		6 A
Max. peak inrush current (20 ms.)		15 A
Max. switching voltage		250 V
Max. AC load (Table 1)		1,5 KVA
Max. DC load		See Table 2

Coils (Ohms ± 10% @ 20ºC)

Pull-in voltage	≤ 0,8 x **Un**
Drop-out voltage	≥ 0,1 x **Un**
Nominal coil power	1,1 VA (AC) / 0,7 W (DC)

Vac	Ω	mA	Vdc	Ω	mA
24	290	45	12	224	53
48	1.200	23	24	742	32
115	7.300	9,5	48	3.500	13,7
230	28.800	4,7	110	19.900	5,5

Insulation

Dielectric strength (1 minute):	
Open contacts	2.000 V
Between contacts and coil	5 KV
Isolation resistance at 500V	>3GΩ
Isolation, IEC 61810-5:	4 KV / 3

Specifications

Operate time + bounce time	10 ms.
Release time + bounce time	8 ms.
Ambient temperature	-40ºC (no ice) ... +70ºC
Mechanical life ops.	10 Mio. AC, 20 Mio. DC relays
Electrical life at nominal load	>100.000 ops.
Operating frequency at nominal load	1.200 / hour
Protection grade	IP40 / RT1
Weight avg.	21 gr.

Standard types

AC 50 Hz, (60 Hz): **24, 48, 115,** (120)**, 230,** (240)

C14-GT13 ..... Vac

DC 12, 24, 48, 110

C14-GT13..... Vdc

The small size of type C14 ... does not allow to carry LED nor mechanical indication, nor testing button.

cULus IEC 61810 EN 60947

Table 1 Electrical life, ops x 10^6

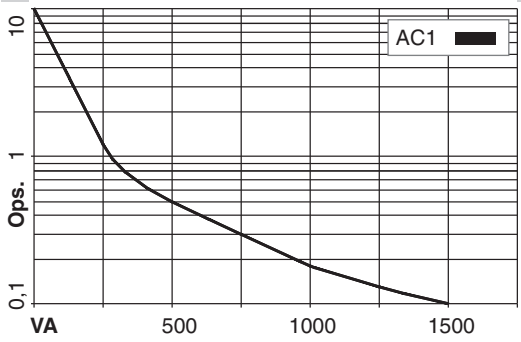

Table 2 Max. DC load

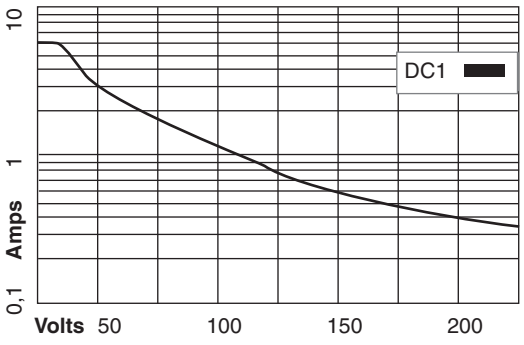

Dimensions mm.

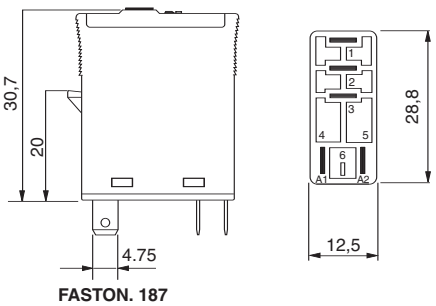

FASTON. 187



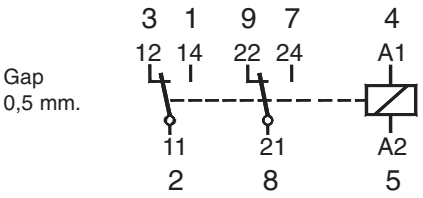

C15-A21

CE

Two poles, change-over contacts

5A 250V AC1 **0,5A 110V DC1**
5A 30V DC1 **0,2A 220V DC1**

Contacts

Materials : Standard, code **1**	AgNi + 0,3µ Au
Optional , code **2**	AgNi + 10µ Au
Max. switching current	5 A
Max. peak inrush current (20 ms.)	15 A
Max. switching voltage	250 V
Max. AC load (Table 1)	1,2 KVA
Max. DC load	See Table 2

Coils (Ohms ± 10% @ 20ºC)

Pull-in voltage	≤ 0,8 x **Un**
Drop-out voltage	≥ 0,1 x **Un**
Nominal coil power	1,1 VA (AC) / 0,7 W (DC)

Vac	Ω	mA	Vdc	Ω	mA
24	290	45	12	224	53
48	1.200	23	24	742	32
115	7.300	9,5	48	3.500	13,7
230	28.800	4,7	110	19.900	5,5

Table 1 Electrical life, ops x 10^6

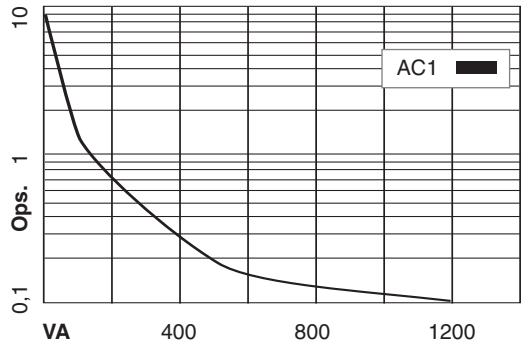

Table 2 Max. DC load

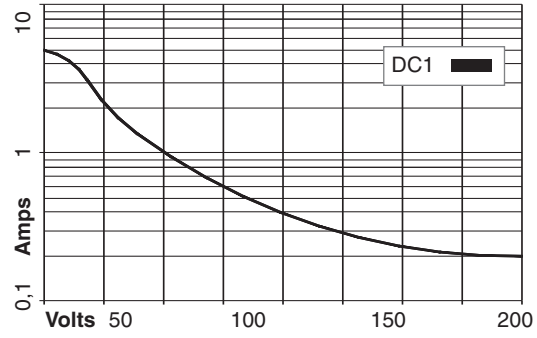

Insulation

Dielectric strength (1 minute): Open contacts	1.000 V
Between adjacents poles	3.000 V
Between contacts and coil	5 KV
Isolation resistance at 500V	>3GΩ
Isolation, IEC 61810-5:	4 KV / 3

Specifications

Operate time + bounce time	10 ms.
Release time + bounce time	8 ms.
Ambient temperature	-40ºC (no ice) ... +70ºC
Mechanical life ops.	10 Mio. AC, 20 Mio. DC relays
Electrical life at nominal load	>100.000 ops.
Operating frequency at nominal load	1.200 / hour
Protection degree	IP40 / RT1
Weight avg.	21 gr.

Dimensions mm.

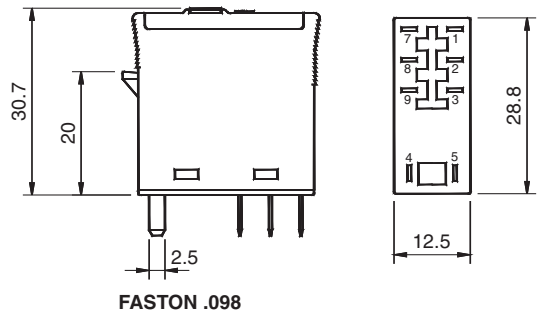

Standard types

AC 50 Hz, (60 Hz): **24, 48, 115,** (120)**, 230,** (240)

C15-A21 ..... Vac

DC 12, 24, 48, 110

C15-A21 ..... Vdc

The small size of type C15 ... does not allow to carry LED nor mechanical indication, nor testing button.

cULus IEC 61810 EN 60947

RELECO



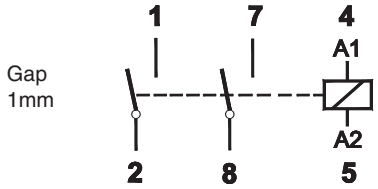

C15-G21

CE

Two poles, open contacts

5A 250V AC1 **0,8A 110V DC1**
5A 30V DC1 **0,4A 220V DC1**

Contacts

Materials :	Standard, code **1**	AgNi + 0,3µ Au
	Optional , code **2**	AgNi + 10µ Au
Max. switching current		5 A
Max. peak inrush current (20 ms.)		15 A
Max. switching voltage		250 V
Max. AC load (Table 1)		1,2 KVA
Max. DC load		See Table 2

Coils (Ohms ± 10% @ 20ºC)

Pull-in voltage	≤ 0,8 x **Un**
Drop-out voltage	≥ 0,1 x **Un**
Nominal coil power	1,1 VA (AC) / 0,7 W (DC)

Vac	Ω	mA	Vdc	Ω	mA
24	290	45	12	224	53
48	1.200	23	24	742	32
115	7.300	9,5	48	3.500	13,7
230	28.800	4,7	110	19.900	5,5

Insulation

Dielectric strength (1 minute): Open contacts	2.000 V
Between adjacents poles	3.000 V
Between contacts and coil	5 KV
Isolation resistance at 500V	>3GΩ
Isolation, IEC 61810-5:	4 KV / 3

Specifications

Operate time + bounce time	10 ms.
Release time + bounce time	8 ms.
Ambient temperature	-40ºC (no ice) ... +70ºC
Mechanical life ops.	10 Mio. AC, 20 Mio. DC relays
Electrical life at nominal load	>100.000 ops.
Operating frequency at nominal load	1.200 / hour
Protection degree	IP40 / RT1
Weight avg.	21 gr.

Standard types

AC 50 Hz, (60 Hz): **24, 48, 115,** (120)**, 230,** (240)

C15-G21 ..... Vac

DC 12, 24, 48, 110

C15-G21 ..... Vdc

The small size of type C15 ... does not allow to carry LED nor mechanical indication, nor testing button.

cULus IEC 61810 EN 60947

Table 1 Electrical life, ops x 10^6

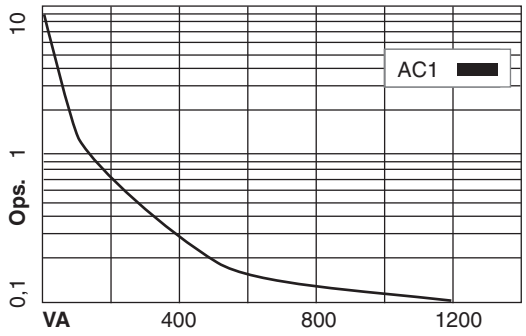

Table 2 Max. DC load

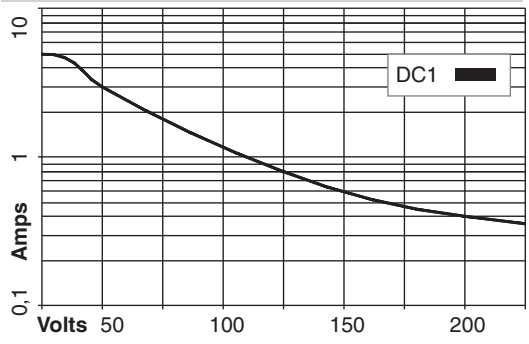

Dimensions mm.

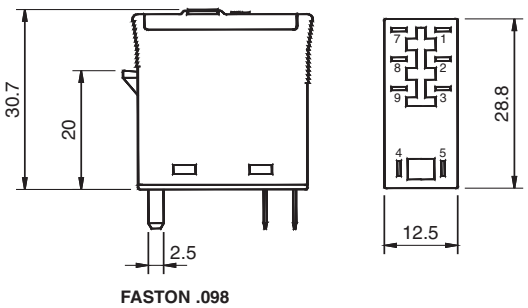

FASTON .098



CSS-DCP

Solid state relay

DC inductive or resistive load switching.
Positive common output

One open contact
2A @ 5 ... 50VDC

Input	Polarity protected
Range of input voltage	5 ... 32 Vdc
Drop-out voltage	< 2,5 Vdc
Input current	3 ± 1 mA
Current stabilizer	Yes
Peak inrush voltage protection	EC-1000-4-5 level 1

Output, positive common	
Max. output current	2 A
Max. output voltage	50 Vdc
Minimum output voltage	5 Vdc
Max. drop voltage	1,3 Vdc
Max. leakage current at 48 Vdc	< 100 µA
Max. overcurrent pulse	5 A, 350 µs
Pulse protection	IEC-1000-4-5 level 1
Max. current at inverse voltage	1 A

Specifications	
Dielectric strengh input / output	4 KV/1 min.
Operate time	1 ms
Release time	max. 2 ms
Working temperature, max.	60ºC
Storage temperature	100ºC
Weigth avg.	28 gr·

Applications

It is to swich, up to 50VDC, heating elements electro-valves, motors, input/output signals on PLC's, solenoids incandescent and fluorescent lamps, etc.
Inductive loads must be shunted with an antiparallel diode.

CSS-DCP Positive common

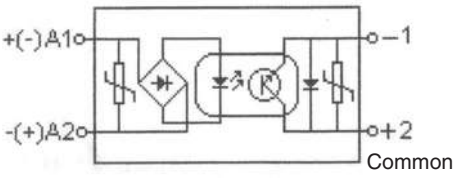

Max. DC load vs. Ambient temperature

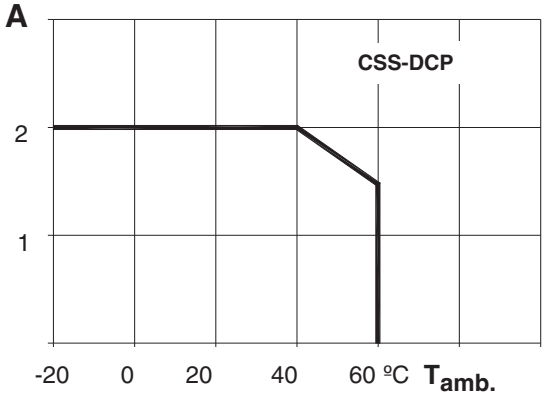

Dimensions mm.

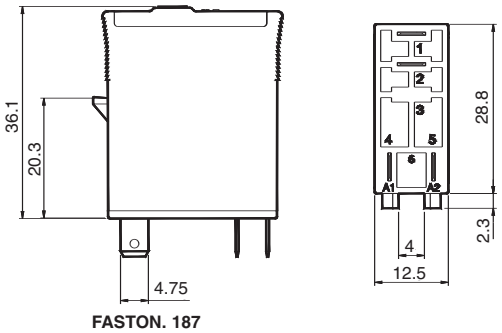

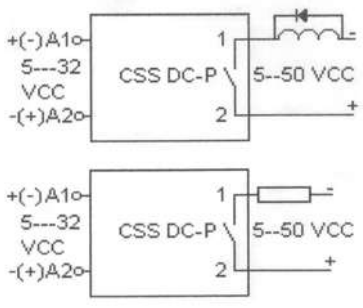

RELECO, SA ■ La Laguna, 30 ■ E-28923 Alcorcón ■ Madrid ■ Phone: +34-91-641 60 12 ■ Fax: +34-91-641 21 93 ■ www.releco.com



CSS-DCN

Solid state relay

DC inductive or resistive load switching.
Negative common output

One open contact
2A @ 5 ... 50V

CSS-DCN Negative common

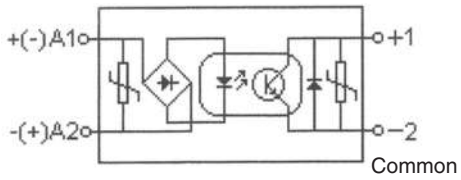

Max. DC load vs. Ambient temperature

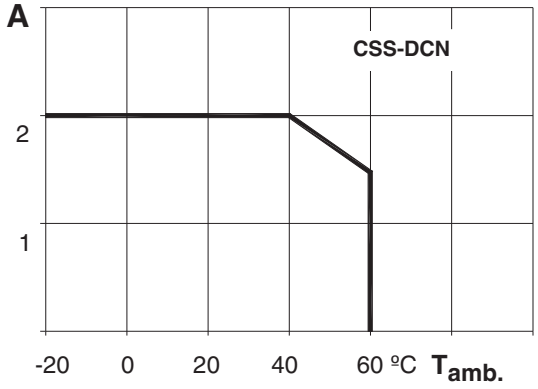

Dimensions mm.

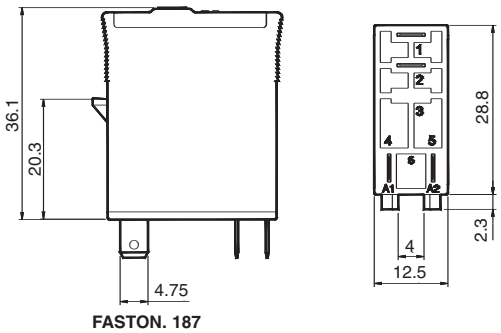

Input Polarity protected

Range of input voltage	5 ... 32 Vdc
Drop-out voltage	< 2,5 Vdc
Input current	3 ± 1 mA
Current stabilizer	Yes
Peak inrush voltage protection	EC-1000-4-5 level 1

Output, negative common

Max. output current	2 A
Max. output voltage	50 Vdc
Minimum output voltage	5 Vdc
Max. drop voltage	1,3 Vdc
Max. leakage current at 48 Vdc	< 100 µA
Max. overcurrent pulse	5 A, 350 µs
Pulse protection	IEC-1000-4-5 level 1
Max. current at inverse voltage	1 A

Specifications

Dielectric strengh input / output	4 KV/1 min.
Operate time	1 ms
Release time	max. 2 ms
Working temperature, max.	60ºC
Storage temperature	100ºC
Weigth avg.	28 gr.

Applications

It is to swich, up to 50VDC, heating elements electro-valves, motors, input/output signals on PLC's, solenoids incandescent and fluorescent lamps, etc.
Inductive loads must be shunted with an antiparallel diode.

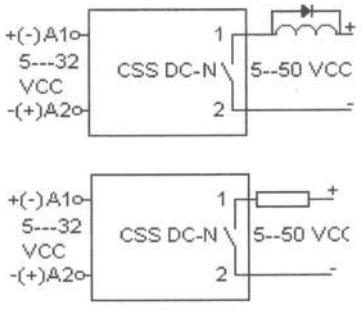



CSS-AC

Solid state relay

AC inductive loads switching.

One open contact

3A @ 24 ... 250V AC, 50/60 Hz

Input — Polarity protected

Range of input voltage	5 ... 32 Vdc
Drop-out voltage	< 2,5 Vdc
Input current	5 ... 15 mA
Current stabilizer	Yes
Peak inrush voltage protection	EC-1000-4-5 level 1

Output — Instantaneous

Max. output current	3 A
Minimum output current	50 mA
Max. output voltage	250 Vac
Minimum output voltage	24 Vac
Max. drop voltage	< 1,5 Vac
Max. leakage current	0,55 mA
Max. Dv/dt	500 V/µs
I^2t for 10 ms. fuse	50 A^2/s

Specifications

Dielectric strength input/output	4KV / 1min.
Operate time	**1/2** cycle
Release time	2ms + **1/2** cycle
Working temperature, max.	60ºC
Storage temperature, max.	100ºC
Weight avg.	28 gr.

Applications

It is specially suitable to switch inductive loads up to 3 A / 250 VAC.

In switching loads with a high inrush or overcurrent (max. Di/dt 50A/µs) as transformers, motors or fluorescents, the maximun output current will limit to 2 A.

CSS-AC AC instantaneous output

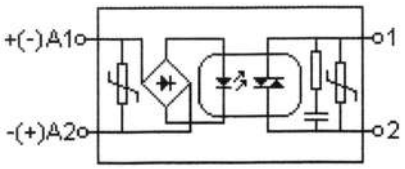

CSS-AC Max. AC load vs. Tamb.

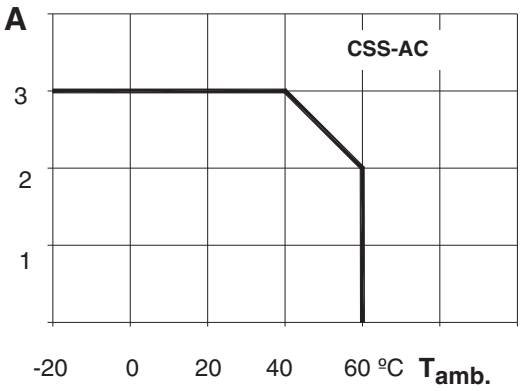

Dimensions mm.

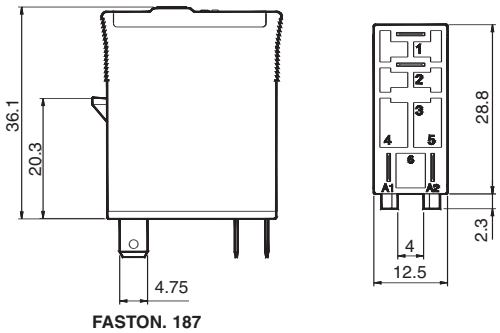

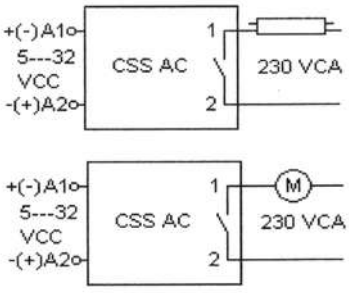



CSS-AZ

Solid state relay

AC resistive loads switching

One open contact

3A @ 24 ... 250V AC, 50/60 Hz

Input	**Polarity protected**
Range of input voltage	5 ... 32 Vdc
Drop-out voltage	< 2,5 Vdc
Input current	5 ... 15 mA
Current stabilizer	Yes
Peak inrush voltage protection	EC-1000-4-5 level 1

Output	**Syncronized to zero**
Max. output current	3 A
Minimum output current	50 mA
Max. output voltage	250 Vac
Minimum output voltage	24 Vac
Max. drop voltage	< 1,5 Vac
Max. leakage current	0,55 mA
Max. Dv/dt	500 V/µs
I^2t for 10 ms. fuse	50 A^2/s

Specifications

Dielectric strength input/output	4KV / 1min.
Operate time	**1/2** cycle
Release time	2ms + **1/2** cycle
Working temperature, max.	60ºC
Storage temperature, max.	100ºC
Weight avg.	28 gr.

Applications

It switches AC resistive loads up to 3 A / 250 VAC in the zero point of the tension and avoids any overcurrent peak in the connection.

Suitable to switch resistors, incandescent lamps, signalling, etc.

Not suitable for inductive loads

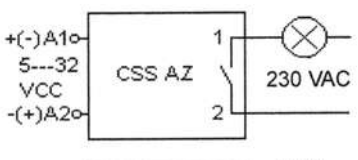

CSS-AZ AC, syncronized to zero

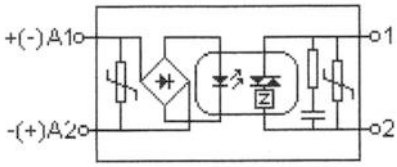

Max. DC load vs. Ambient temperature

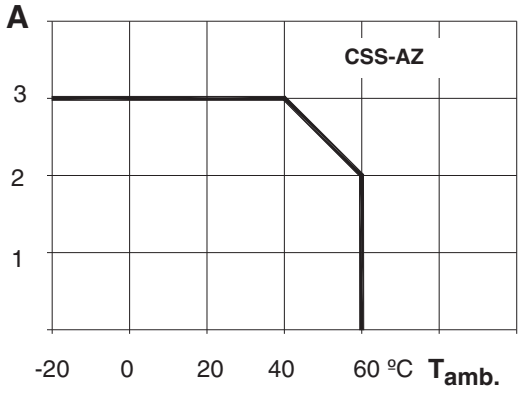

Dimensions mm.

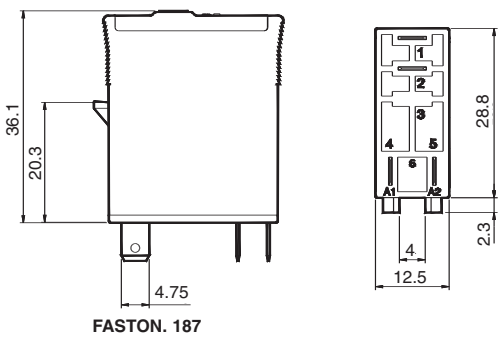

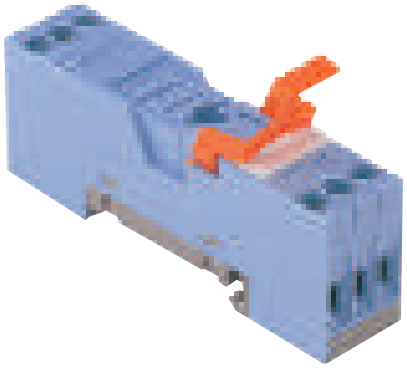

S10-M

New I/O socket for IRC relays one change-over contact, 16A

New I/O socket, with terminals in-line for relays C10A, C10G, C10T, C14A, C14G, C16A, C16G and CSS

Both this socket and the S12 are designed to get a homogeneous set, with identical terminals disposition, which allows the easy identification of the contacts set in each level and a simpler wiring.

Both A2 terminals allow a secure interconnection through external bridges, among an unlimited number of these sockets or a mixture of S10-M and the new **S12**.

The A2 terminal, free on both first and last sockets is used to connect the cable of common polarity.

Wiring diagram

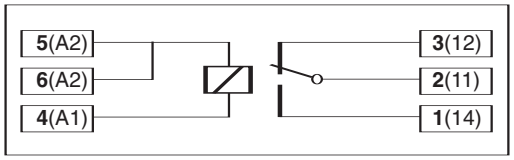

Dimensions mm.

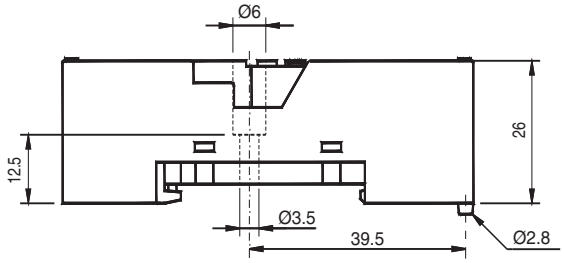

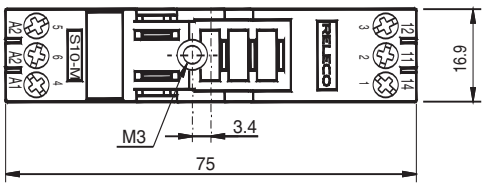

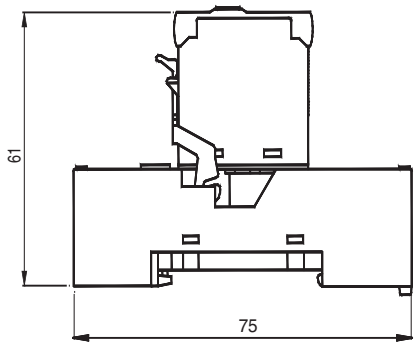

Specifications

Nominal load	16A / 250V
Insulation: Dielectric strength, 1 minute	
Between coil and contacts	5 KV
Between all terminals and rail DIN	5 KV
Max. screw torque	1,2 Nm
Screw dimensions	M3, Pozi
Wire in-lets capacity:	
Solid wire	4 mm^2 or 2 x 2,25 mm^2
Multi - core	22 - 14 AWG
Ferrule tip terminals	4 mm^2

Integrated hold-down clip
Removable marking label

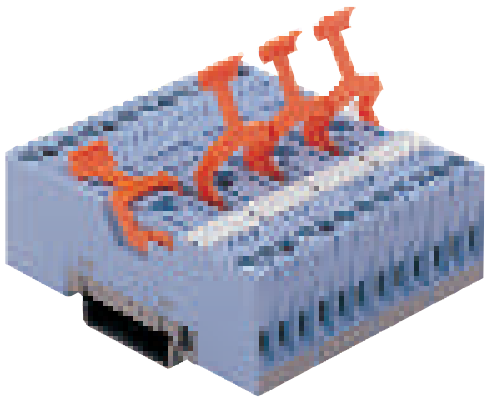

IEC 61810 EN 60947

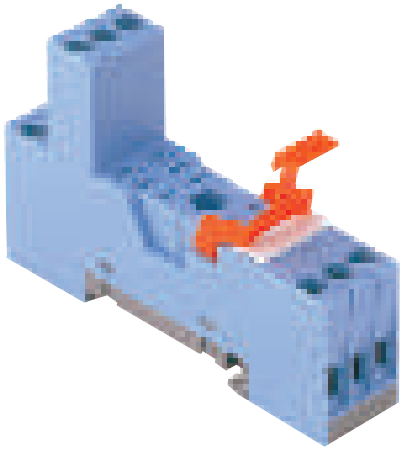

S12

New I/O socket for IRC relays two change-over contacts, 5A

New I/O socket with terminals in-line, for relays C12, C12G, C15 and C15G

Both this socket and the S10-M are designed to get a homogeneous set, with identical terminals disposition, which allows the easy identification of the contacts set in each level and a simpler wiring.

Both A2 terminals allow a secure interconnection through external bridges, among an unlimited number of these sockets or a mixture of S12 and the new **S10-M**.

The A2 terminal, free on both first and last sockets is used to connect the cable of common polarity.

Wiring diagram

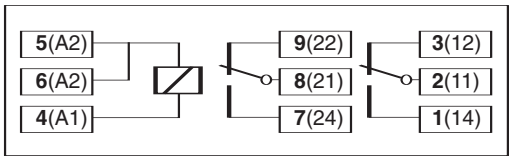

Dimensions mm.

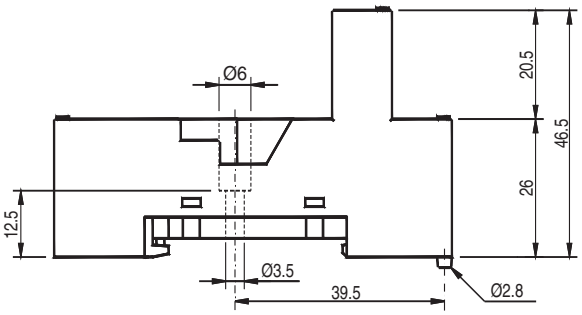

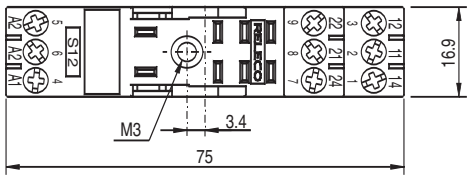

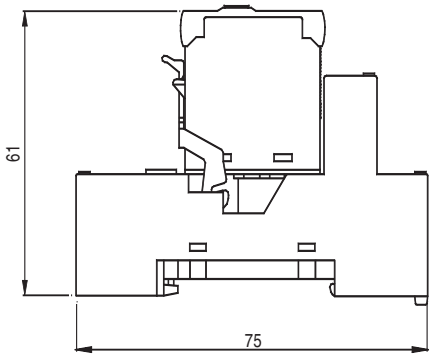

Specifications

Poles	Two change-over contacts
Nominal load	5 A / 250V
Insulation:	
Between coil and contacts	5 KV
Between every terminal and DIN rail	5 KV
Between adjacent contacts	3 KV
Max. screw torque	1,2 Nm
Wire in-lets multi-core capacity	22-14 AWG
Solid wire or ferrule tips capacity	4 mm^2

Solid terminals of zinc-plated brass.
Integrated hold-down clip.
Removable marking label.

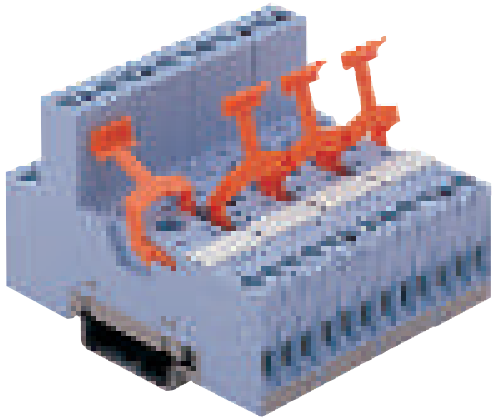

IEC 61810 EN 60947

S10-P

Printed circuit socket for 1 pole IRC Relays



Specifications

Nominal load	10A 250V
Dielectric strength 1 min.	
Coil terminals to contacts	5KV
Hard brass tin-plated terminals	0,5 x 1 mm
Integrated hold-down clip	

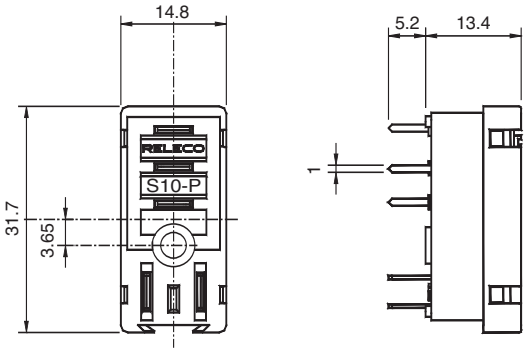

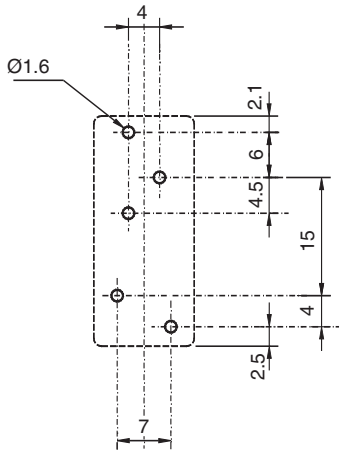

S12-P

Printed circuit socket for 2-pole IRC Relays



Specifications

Nominal load	5A 250V
Dielectric strength 1 min.	
Coil terminals to contacts	5KV
Hard brass tin-plated terminals	0,5 x 1 mm
Integrated hold-down clip	

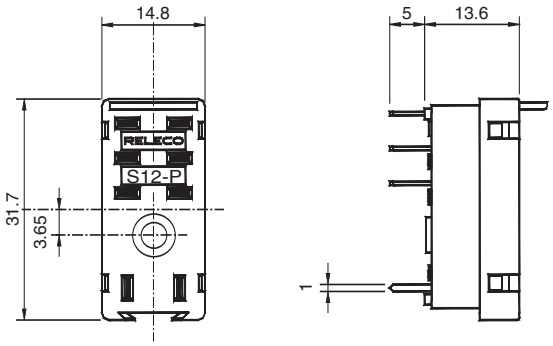

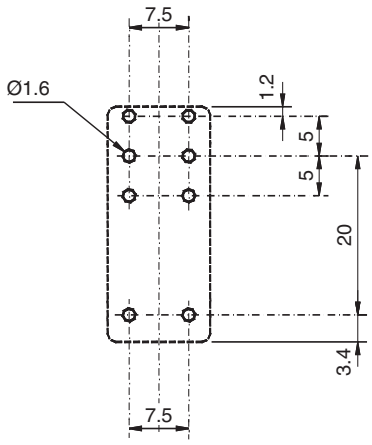

IEC 61810 EN 60947

RELECO, SA ▪ La Laguna, 30 ▪ E-28923 Alcorcón ▪ Madrid ▪ Phone: +34-91-641 60 12 ▪ Fax: +34-91-641 21 93 ▪ www.releco.com

V40 V10

Power bridge bars for sockets S10-M and S12

V40 bridges join four similar points in four aside adjacent sockets. They can join up either among themselves or to **V10** units, to bridge an unlimited number of sockets S10-M and S12 in any combination.

V10 bridges are units to connect a single socket to the next one, so you bridge less or more than 4 sockets. Made of copper with a current capacity of 40 A.

Please, see more information on page 5.



V40-G



V10-G



V40-R



V10-R

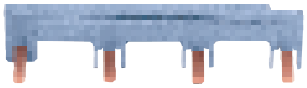

V40-A

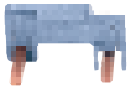

V10-A

B20

Coil bridge bars for sockets S10-M and S12

B20 bridges points A2, internally connected, of every aside adjacent socket S10-M or S12.

Each element connects point 6 of the first socket to point 5 of the next one, always leaving free the point 5 of the first socket and the point 6 of the last one, to connect the common polarity cable.

Please, see more information on page 5.



B20-G



B20-R



B20-A

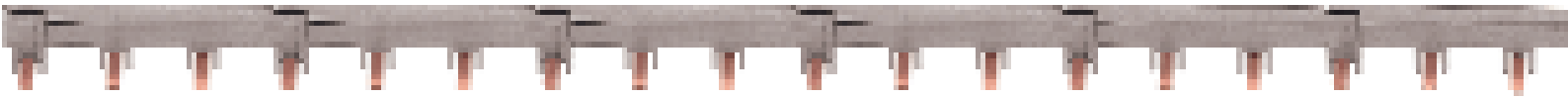

IEC 61810 EN 60947

IRC relays, versión E

Types C14... and C15...

Cover for flange panel mounting

Ordering code:

Add “E” to the standard type code.

Example: C14-A10**E** or C15-A21**E**



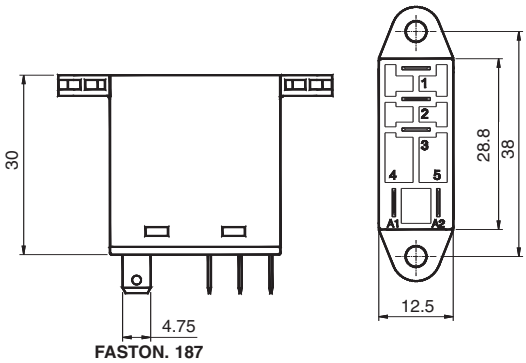

RELECO WORLDWIDE SALES NET



ARGENTINA
ELECTRÓNICA RHOMBERG, S.A.
1640 Martínez, Bs. As.
www.rhomberg.com.ar
rhomberg@rhomberg.com.ar



AUSTRALIA
RITTAL PTY. LTD.
Taren Point 2229, N.S.W.
www.rittal.com.au
info@rittal.com.au



AUSTRIA
AVS SCHMERSAL V.m.b.H.
A-1232 Wien
www.avs-schmersal.co.at
info@avs-schmersal.at



BELGIUM
MULTIPROX N.V.
B-9300 Aalst
www.multiprox.be
info@multiprox.be



BULGARY
SENSOMAT LTD.
BG-9300 Dobrich
www.sensomat.info
info@sensomat.info



CANADA
CHARTWELL ELECTRONICS, INC.
Markham, Ontario L6G 1B5
www.chartwell.ca
sales@chartwell.ca



CHILE
ER DISTRIBUIDORA, S.A.
2209 Providencia, Santiago
www.erd.cl
erd.ventas@erd.cl



CHINA
TURCK TIANJIN SENSOR CO. LTD.
TJ-300113 Tianjin
www.turck.com.cn
turcktj@public1.tpt.tj.cn



COLOMBIA
ACJ HIGH VOLTAGE LTDA.
Bogotá D.C.
acjhighvoltage@telesat.com.co



COSTA RICA
ELVATRON, S.A.
8-3770 San José
www.elvatron.com
elvatron@sol.racsa.co.cr



CZECH REPUBLIC
TURCK S.R.O.
500 03 Hradec Králové
www.turck.cz
turck@turck.cz



DENMARK
OEM AUTOMATIC A/S
3660 Stenløse
www.oem-automatic.dk
info@dk.oem.se



ECUADOR
IANDCECONTROL, S.A.
Quito, Ecuador
instrcontrol@porta.net



FINLAND, ESTONIA
OEM AUTOMATIC OY
FI-20101 Turku
www.oem.fi
info@fi.oem.se



FRANCE
ALEP SYSTÈMES
38240 Meylan
www.alep-systemes.fr
contact@alep-systemes.fr



GERMANY
HANS TURCK GmbH & Co. KG
D-45472 Mülheim/Ruhr
www.turck-globe.de
turckmh@mail.turck-globe.de



GREECE
KALAMARAKIS SAPOUNAS S.A.
GR-13671 Aharnes
kalamarakis.sapounas@ksa.gr



HUNGARY
TURCK HUNGARY KFT.
H-1087 Budapest
www.turck.hu
turck@turck.hu



INDIA
PARAMOUNT INDUSTRIES
Bangalore - 560 010
paraind@vsnl.com



IRELAND
TCM CONTROLS, LTD.
Dublin-12
www.homepage.eircom.net/~tcm/
tmc@tinet.ie



ISRAEL
MECHLOVITZ KALMAN
Holon
consys_ltd@yahoo.com



ITALY
OEM AUTOMATIC Srl.
20090 Cesano Boscone (MI)
www.oemautomatic.it
info@oemautomatic.it



JAPAN
TAMURA SAFETY SYSTEMS LTD.
Osaka 542-0081
ktamura@tc5.so-net.ne.jp



LITHUANIA
HIDROTEKA
LT-3028 Kaunas
www.hidroteka.lt
hidroteka@mail.lt



MEXICO
CASA SORIANO, S.A. DE C.V
44190 Guadalajara, Jalisco
soriano@foreigner.clase.udg.mex



MOROCCO
MAGHREB ELECTROTECHNIQUE
20300 Casablanca
Mail@beltransfo.com



NETHERLANDS
VIERPOOL BV
NL-3606 AS Maarssen
www.vierpool.nl
info@vierpool.nl



NEW ZEALAND
AMPY EMAIL METERING
Penrose, Auckland
name.name@ampymetering.co.nz



NORWAY
OEM AUTOMATIC AS
N-3002 Drammen
www.oem.no
info@no.oem.se



PAKISTAN
GINZA INTERNATIONAL CORP.
Karachi - 74000
ellhai@cubexs.net.pk



PERU
PROMOTORES ELÉCTRICOS, S.A.
"PROMELSA"
Lima, 13
www.promelsa.com.pe
promotores@promelsa.com.pe



POLAND
OEM AUTOMATIC SP.ZO.O.
02-445 Warsaw
www.oemautomatic.com.pl
info@pl.oem.se



RUMANIA
SYSCOM 18 SRL
060011 Bucuresti
www.syscom.ro
venache@syscom.ro



RUSSIA
RELE-AVTOMATIZATSIYA
115088 Moscow
www.releauto.ru
releauto@mail.ru



SLOWAKIA
MARPEXI S.R.O.
SK-01851 Nová Dubnica
www.turck.com



SOUTH AFRICA
RHOMBERG ELECTRONICS
Kramerville, Sandton
www.rhomberg.co.za



SWEDEN
OEM AUTOMATIC AB
S-573 28 Tranås
www.oem.se
info@int.oem.se



SWITZERLAND
COMAT AG
CH-3076 Worb
www.comat.ch
info@comat.ch



THAILAND
VANICHYANYONG
HOLDING CO.LTD.
Muang, Nonthaburi 11000
vanich@hacoweb.com



TURKEY
CERAN OTOMASYON LTD.
80260 Okmeydani, Istanbul
www.ceran.com.tr
ceran@turck.net

UNITED KINGDOM
OEM-AUTOMATIC LIMITED
Whetstone, Leics. LE8 6ZG
www.oem.co.uk
information@uk.oem.se

U.S.A.
TURCK INC.
Plymouth Mn. 55441
www.turck.com

VENEZUELA
EURISKO CONSULTORES, S.A.
Boleita Sur, Caracas
www.eurisko.com.ve
info@eurisko.com.ve

AUTHORIZED DEALER

RELECO

WORLDWIDE HEADQUARTERS

RELECO, S.A.
Pol. Ind. Urtinsa, La Laguna, 30
E-28923 Alcorcón (Madrid) - Spain
Tel: +34-91-641.60.12
Fax: +34-91-641.21.93
Email: export@releco.com
www.releco.com

10/04 SEDIMÁS