MR0901

T-slot cylinder sensor with reed contact

MRI2021-AKOA/R/AS

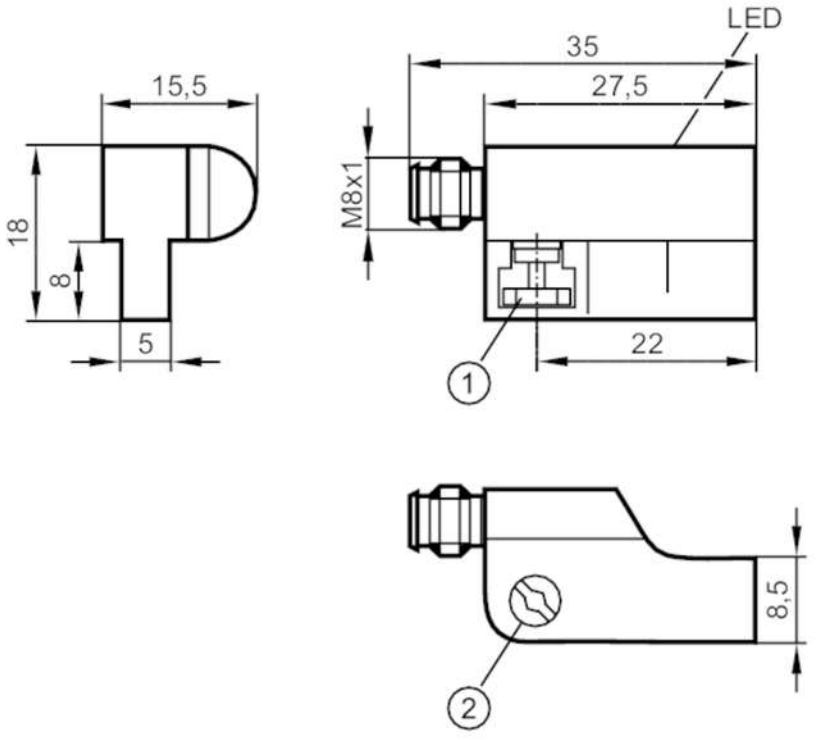

1 Fixing element
2 combined head screw for fixing element

Product characteristics		
Electrical design		PNP/NPN
Output function		normally open
Dimensions	[mm]	27.5 x 18 x 15.5
Electrical data		
Operating voltage	[V]	5...50 AC / 5...60 DC; (cULus supply class 2: 5...30 AC / 5...60 DC)
Protection class		III
Reverse polarity protection		yes
Reverse polarity protection		yes
Outputs		
Electrical design		PNP/NPN
Output function		normally open
Max. voltage drop switching output DC	[V]	5
Max. voltage drop switching output AC	[V]	5
Permanent current rating of switching output AC	[mA]	100; (External protective circuit for inductive load (valve, contactor, etc.) necessary.)
Permanent current rating of switching output DC	[mA]	100; (External protective circuit for inductive load (valve, contactor, etc.) necessary.)
Switching frequency AC	[Hz]	1000
Switching frequency DC	[Hz]	1000
Max. switching power	[W]	10

MR0901

T-slot cylinder sensor with reed contact

MRI2021-AKOA/R/AS

Short-circuit protection			no
Overload protection			no
Detection zone			
Response sensitivity	[mT]		2.1
Travel speed	[m/s]		10
Accuracy / deviations			
Hysteresis	[mm]		1
Repeatability	[mm]		< 0.2
Response times			
Max. fall time	[ms]		0.1
Max. make time incl. bounce	[ms]		0.6
Operating conditions			
Ambient temperature	[°C]		-25...70
Protection			IP 65; IP 67
Tests / approvals			
EMC		EN 61000-4-2 ESD	- CD / 8 kV AD
		EN 61000-4-3 HF radiated	10 V/m
		EN 61000-4-4 Burst	2 kV
		EN 61000-4-5 Surge	0,5 kV line to line, Ri: 2 Ohm
		EN 61000-4-6 HF conducted	10 V
		EN 55011	class B
MTTF	[years]		9434
Mechanical data			
Weight	[g]		12.5
Mounting			non-flush mountable
Type of mounting			fastening clamp with combined slot / hexagon socket, width across flats 1.5
Cylinder type			T-slot cylinders
Dimensions	[mm]		27.5 x 18 x 15.5
Materials			housing: PA; fastening clamp: stainless steel / brass
Switching cycles when connected to PLC	[Mio]		< 40
Displays / operating elements			
Display		switching status	1 x LED, yellow
Electrical connection			
Required protection			miniature fuse to IEC60127-2 sheet 1; ≤ 0,175 A; fast acting
Accessories			
Items supplied			rubber placeholder: 1
Remarks			
Remarks			No LED function in case of polarity reversal in DC operation.
			Recommendation: Check the safe functioning of the unit after a short circuit.
			operating voltage "supply class 2" according to cULus
Pack quantity			1 pcs.

MR0901

T-slot cylinder sensor with reed contact

MRI2021-AKOA/R/AS

Electrical connection - plug

Connector: 1 x M8; coding: A; Locking: snap-fit

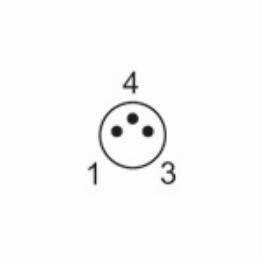

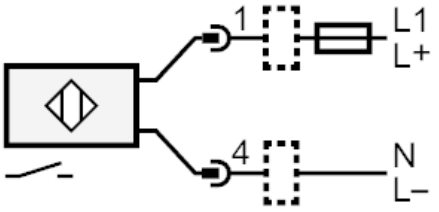

Note miniature fuse to IEC60127-2 sheet 1 ≤ 0.175 A fast acting