DATASHEET - PKZM0-4-T



Transformer-protective circuit-breaker, 3p, Ir=2.5-4A, screw connection

Part no.	**PKZM0-4-T**
Catalog No.	**088914**
Alternate Catalog No.	**XTPT004BC1NL**
EL-Nummer (Norway)	**4315157**

Delivery program

Product range			PKZM0...T transformer-protective circuit-breakers up to 25 A
Basic function			Transformer protection
			IE3
Notes			Also suitable for motors with efficiency class IE3. IE3-ready devices are identified by the logo on their packaging.
Connection technique			Screw terminals
Contact sequence			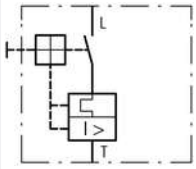
Rated uninterrupted current	I_u	A	4
Setting range			
Overload releases	I_r	A	2.5 - 4
short-circuit release			
max.	I_{rm}	A	84
Phase-failure sensitivity			IEC/EN 60947-4-1, VDE 0660 Part 102

Notes For the protection of transformers with a high inrush current.
Can be snapped on to IEC/EN 60715 top-hat rail with 7.5 or 15 mm height.

Technical data

General

Standards			IEC/EN 60947, VDE 0660
Climatic proofing			Damp heat, constant, to IEC 60068-2-78 Damp heat, cyclic, to IEC 60068-2-30
Ambient temperature			
Storage		°C	- 40 - 80
Open		°C	-25 - +55
Enclosed		°C	- 25 - 40
Mounting position			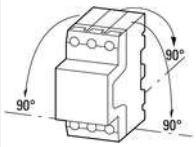
Direction of incoming supply			as required
Degree of protection			
Device			IP20
Terminations			IP00
Protection against direct contact when actuated from front (EN 50274)			Finger and back-of-hand proof
Mechanical shock resistance half-sinusoidal shock 10 ms to IEC 60068-2-27		g	25
Altitude		m	Max. 2000
Terminal capacity main cable			

Screw terminals			
Solid		mm^2	1 x (1 - 6) 2 x (1 - 6)
Flexible with ferrule to DIN 46228		mm^2	1 x (1 - 6) 2 x (1 - 6)
Solid or stranded		AWG	18 - 10
Stripping length		mm	10
Specified tightening torque for terminal screws			
Main cable		Nm	1.7
Control circuit cables		Nm	1

Main conducting paths

Rated impulse withstand voltage	U_{imp}	V AC	6000
Overvoltage category/pollution degree			III/3
Rated operational voltage	U_e	V AC	690
Rated uninterrupted current = rated operational current	$I_u = I_e$	A	4
Rated frequency	f	Hz	40 - 60
Current heat loss (3 pole at operating temperature)		W	4.88
Lifespan, mechanical	Operations	$x\ 10^6$	0.1
Lifespan, electrical (AC-3 at 400 V)			
Lifespan, electrical	Operations	$x\ 10^6$	0.1
Max. operating frequency		Ops/h	40
Short-circuit rating			
DC			
Short-circuit rating		kA	60
Motor switching capacity			
AC-3 (up to 690V)		A	4
DC-5 (up to 250V)		A	4 (3 contacts in series)

Trip blocks

Temperature compensation			
to IEC/EN 60947, VDE 0660		°C	- 5 … 40
Operating range		°C	- 25 … 55
Temperature compensation residual error for T > 40 °C			≦ 0.25 %/K
Setting range of overload releases		$x\ I_u$	0.6 - 1
short-circuit release			Basic device, fixed: 20 x I_u
Short-circuit release tolerance			± 20%
Phase-failure sensitivity			IEC/EN 60947-4-1, VDE 0660 Part 102

Design verification as per IEC/EN 61439

Technical data for design verification			
Rated operational current for specified heat dissipation	I_n	A	4
Heat dissipation per pole, current-dependent	P_{vid}	W	1.63
Equipment heat dissipation, current-dependent	P_{vid}	W	4.88
Static heat dissipation, non-current-dependent	P_{vs}	W	0
Heat dissipation capacity	P_{diss}	W	0
Operating ambient temperature min.		°C	-25
Operating ambient temperature max.		°C	55
IEC/EN 61439 design verification			
10.2 Strength of materials and parts			
10.2.2 Corrosion resistance			Meets the product standard's requirements.
10.2.3.1 Verification of thermal stability of enclosures			Meets the product standard's requirements.
10.2.3.2 Verification of resistance of insulating materials to normal heat			Meets the product standard's requirements.
10.2.3.3 Verification of resistance of insulating materials to abnormal heat and fire due to internal electric effects			Meets the product standard's requirements.
10.2.4 Resistance to ultra-violet (UV) radiation			Meets the product standard's requirements.
10.2.5 Lifting			Does not apply, since the entire switchgear needs to be evaluated.
10.2.6 Mechanical impact			Does not apply, since the entire switchgear needs to be evaluated.

10.2.7 Inscriptions			Meets the product standard's requirements.
10.3 Degree of protection of ASSEMBLIES			Does not apply, since the entire switchgear needs to be evaluated.
10.4 Clearances and creepage distances			Meets the product standard's requirements.
10.5 Protection against electric shock			Does not apply, since the entire switchgear needs to be evaluated.
10.6 Incorporation of switching devices and components			Does not apply, since the entire switchgear needs to be evaluated.
10.7 Internal electrical circuits and connections			Is the panel builder's responsibility.
10.8 Connections for external conductors			Is the panel builder's responsibility.
10.9 Insulation properties			
10.9.2 Power-frequency electric strength			Is the panel builder's responsibility.
10.9.3 Impulse withstand voltage			Is the panel builder's responsibility.
10.9.4 Testing of enclosures made of insulating material			Is the panel builder's responsibility.
10.10 Temperature rise			The panel builder is responsible for the temperature rise calculation. Eaton will provide heat dissipation data for the devices.
10.11 Short-circuit rating			Is the panel builder's responsibility. The specifications for the switchgear must be observed.
10.12 Electromagnetic compatibility			Is the panel builder's responsibility. The specifications for the switchgear must be observed.
10.13 Mechanical function			The device meets the requirements, provided the information in the instruction leaflet (IL) is observed.

Technical data ETIM 7.0

Low-voltage industrial components (EG000017) / Power circuit-breaker for trafo/generator/installation protection (EC000228)		
Electric engineering, automation, process control engineering / Low-voltage switch technology / Circuit breaker (LV < 1 kV) / Circuit breaker for power transformer, generator and system protection (ecl@ss10.0.1-27-37-04-09 [AJZ716013])		
Rated permanent current Iu	A	4
Rated voltage	V	690 - 690
Rated short-circuit breaking capacity Icu at 400 V, 50 Hz	kA	150
Overload release current setting	A	4 - 4
Adjustment range short-term delayed short-circuit release	A	0 - 0
Adjustment range undelayed short-circuit release	A	84 - 84
Integrated earth fault protection		No
Type of electrical connection of main circuit		Screw connection
Device construction		Other
Suitable for DIN rail (top hat rail) mounting		Yes
DIN rail (top hat rail) mounting optional		Yes
Number of auxiliary contacts as normally closed contact		0
Number of auxiliary contacts as normally open contact		0
Number of auxiliary contacts as change-over contact		0
With switched-off indicator		Yes
With under voltage release		No
Number of poles		3
Position of connection for main current circuit		Other
Type of control element		Turn button
Complete device with protection unit		Yes
Motor drive integrated		No
Motor drive optional		No
Degree of protection (IP)		IP20

Approvals

Specially designed for North America		No

Characteristics

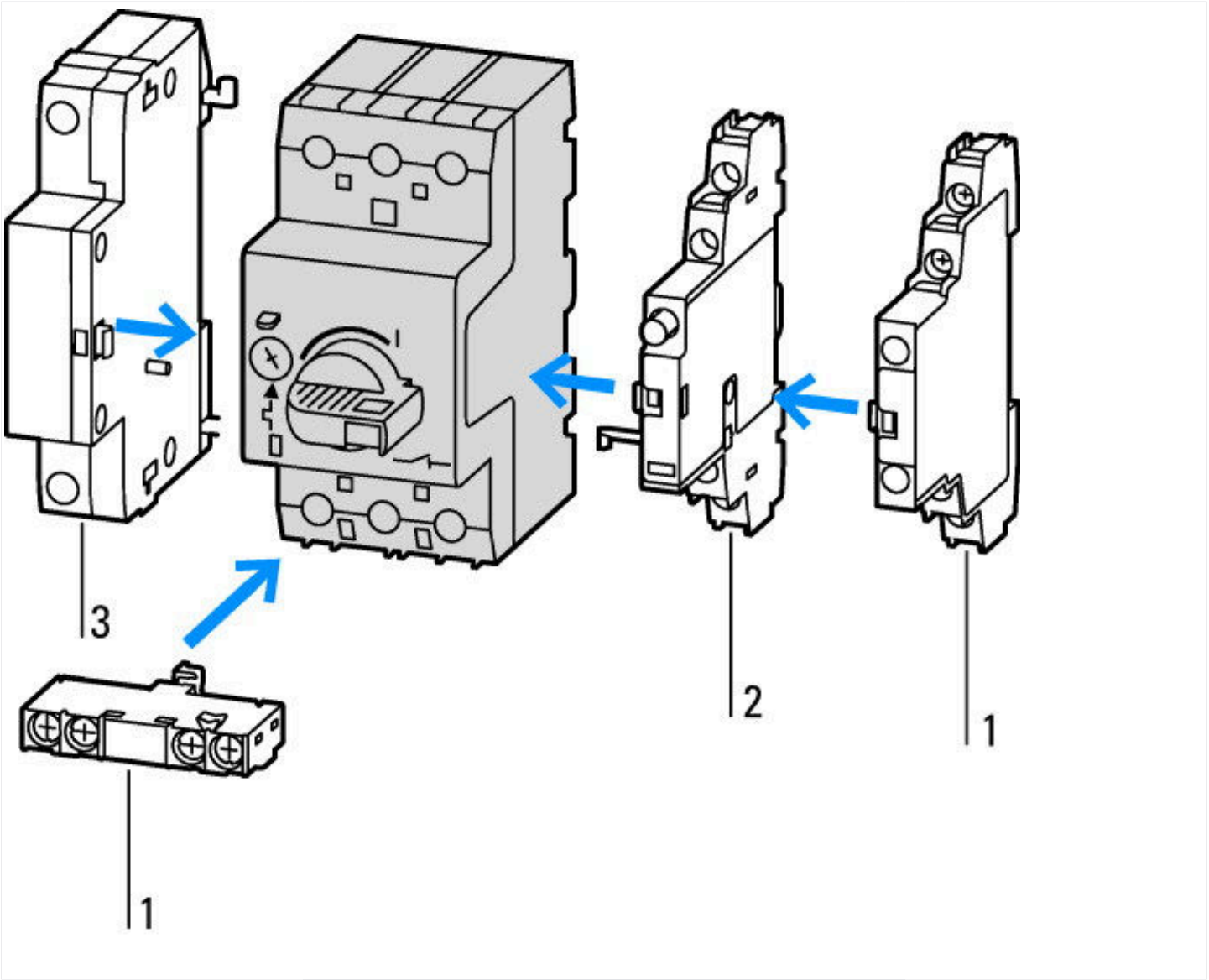

1: Standard auxiliary contact
2: Trip-indicating auxiliary contact
3: Shunt releases, undervoltage releases

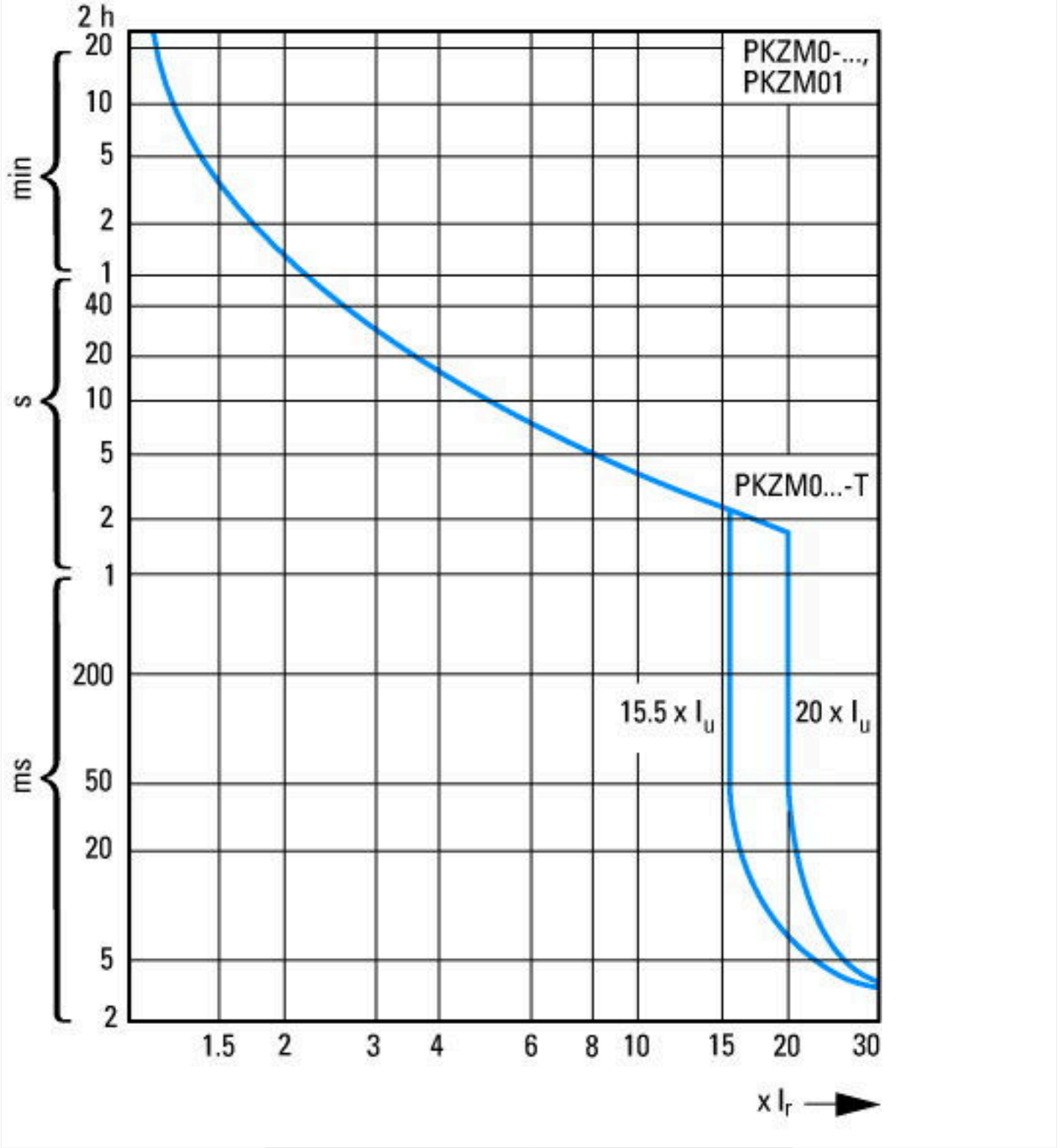

Tripping characteristics motor-protector circuit breaker PKZM0, PKZM0-...T (not for PKM0-...), PKZM01

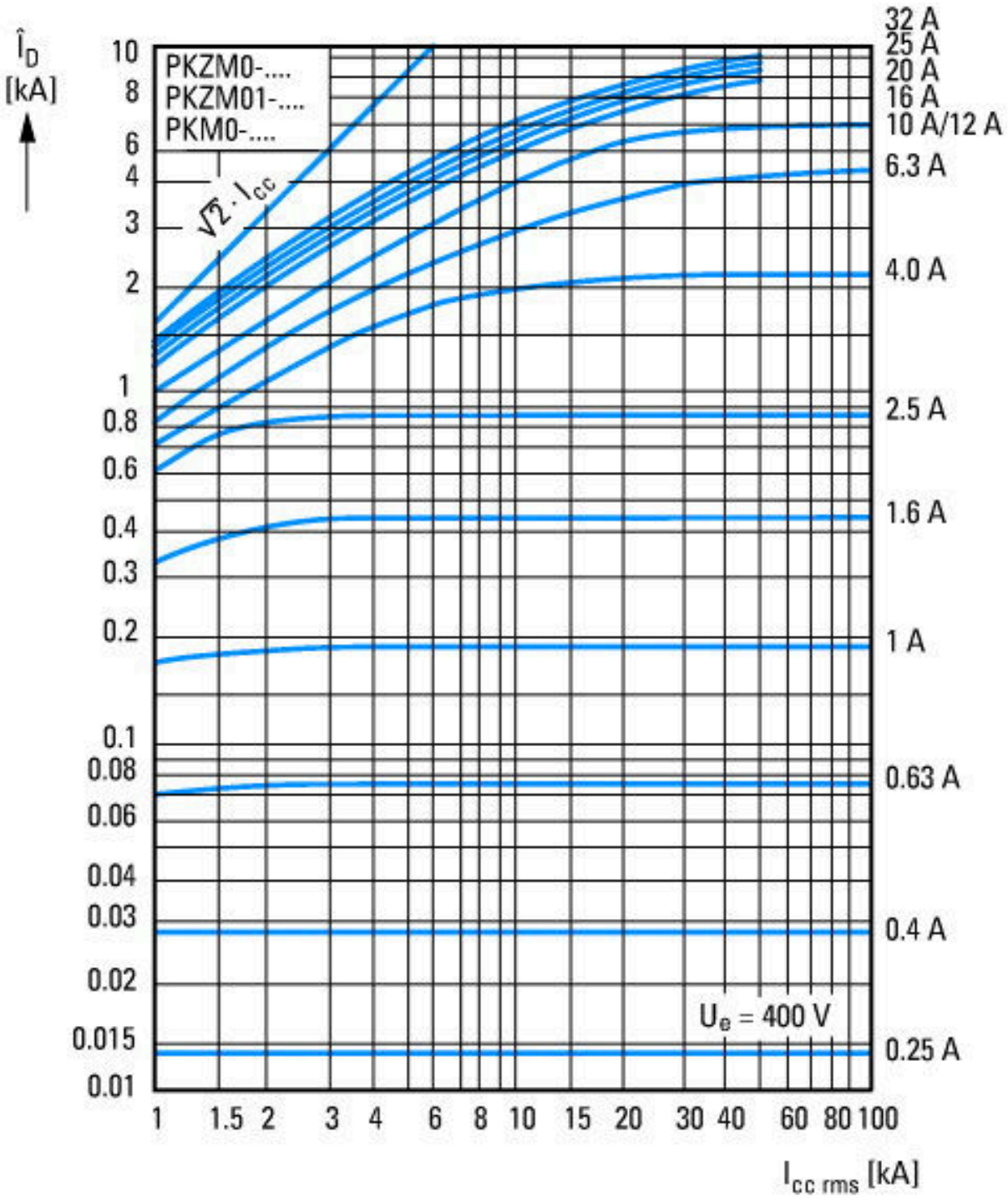

Let-through current

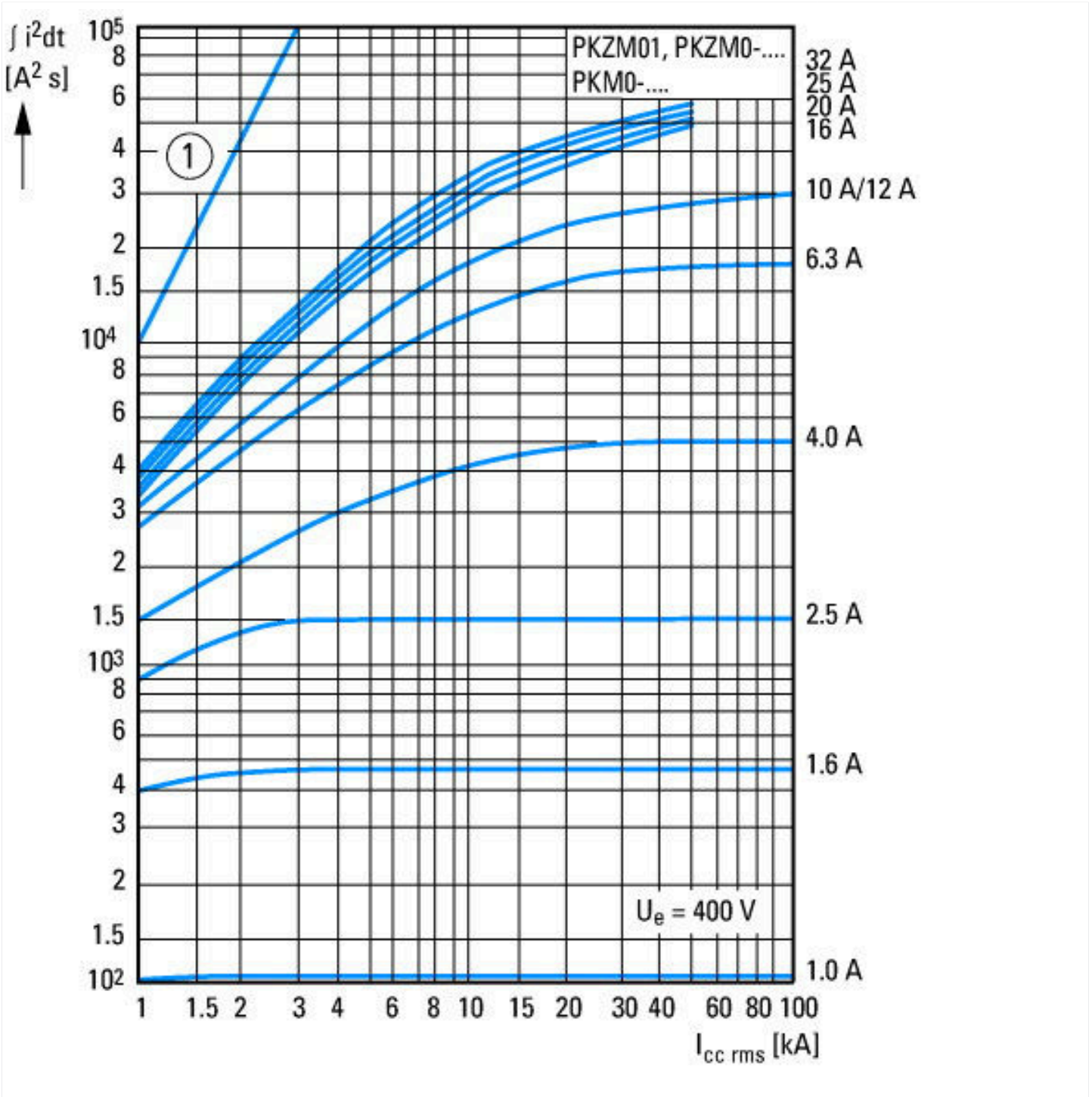

① 1 half-cycle
Let-through energy

Dimensions

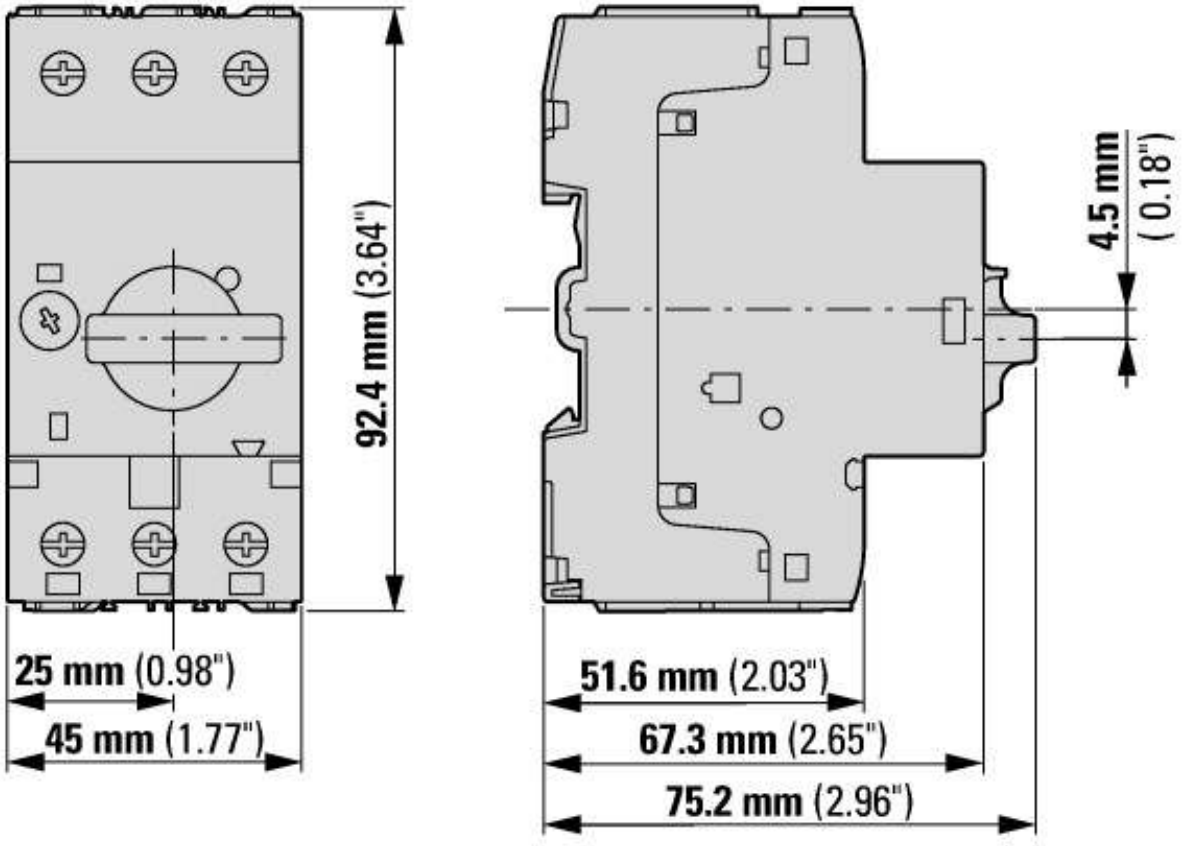

Motor-protective circuit-breaker with standard auxiliary contact
PKZM0-…(+NHI-E-…-PKZ0)
PKZM0-…-T(+NHI-E-…-PKZ0)
PKM0-…(+NHI-E-…-PKZ0)

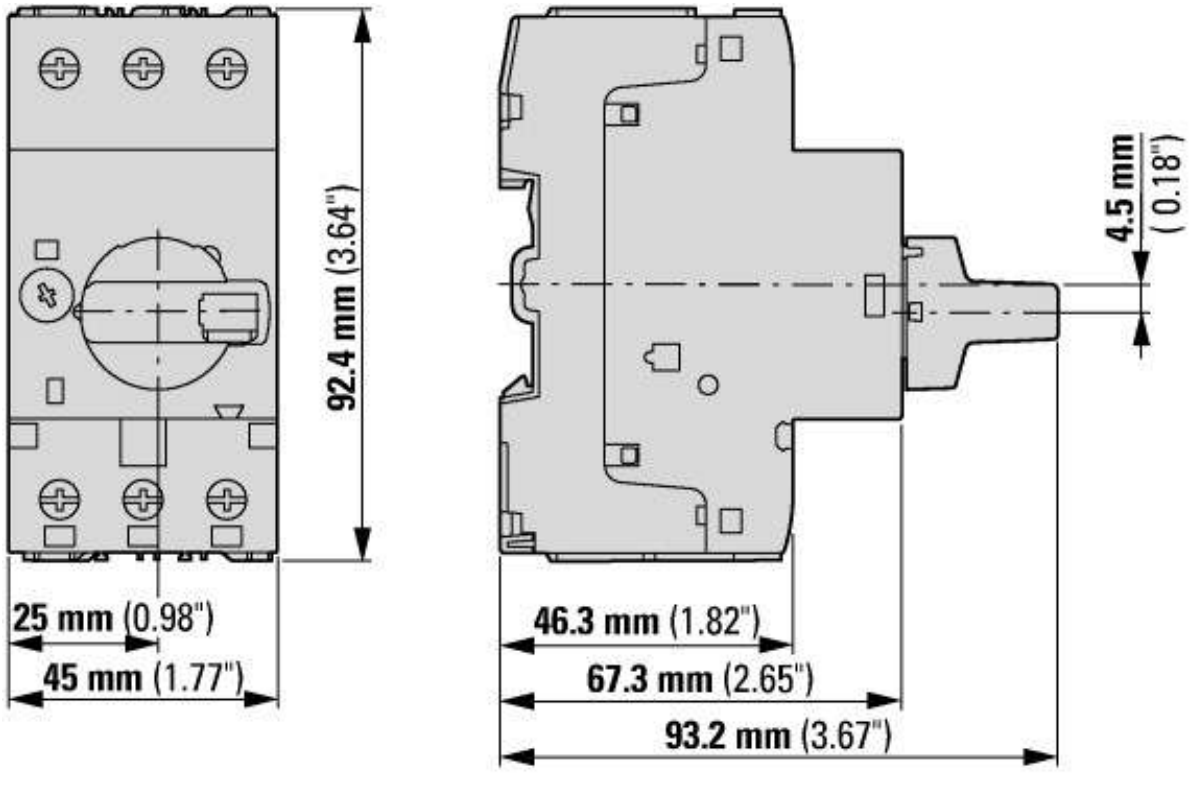

Motor-protective circuit-breakers with lockable rotary handles
PKZM0-…+AK-PKZ0

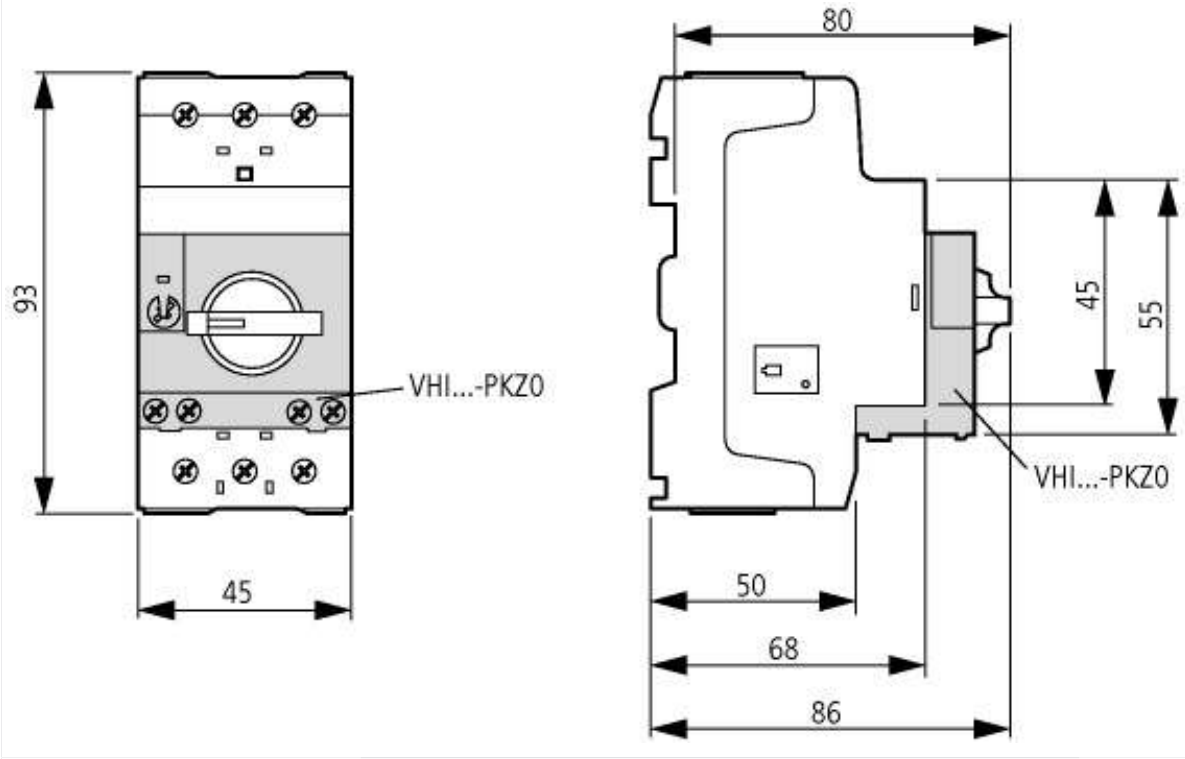

Motor-protective circuit-breakers with early-make auxiliary contacts
PKZM0-…+VHI-…-PKZ0

© 10/2020 by Eaton Industries GmbH