IRIMO



549-230-2

Silicone Gun for 9" Cartridges

PRODUCT DETAILS

- Caulking gun for 9" cartridges
- Suitable for most grades of resins and glues
- Handle and trigger made of high quality aluminium
- Rotary skeleton for easy loading
- Needle included for cleaning
- Thrust ratio 7:1
- Maximum pushing force 1500 N

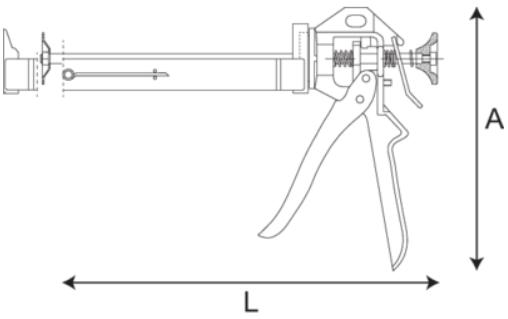

PRODUCT ATTRIBUTES

Product	L	A	g
549-230-2	330 mm	200 mm	550 g