THE INFORMATION CONTAINED IN THIS DRAWING IS THE SOLE PROPERTY OF L-COM, INC. ANY REPRODUCTION IN PART OR WHOLE WITHOUT THE WRITTEN PERMISSION OF L-COM, INC. IS PROHIBITED.

REVISIONS			
REV.	DESCRIPTION	DATE	APPROVED
C	ECN 11699: ADD TEMPERATURE RATING	03/03/2022	DGUST

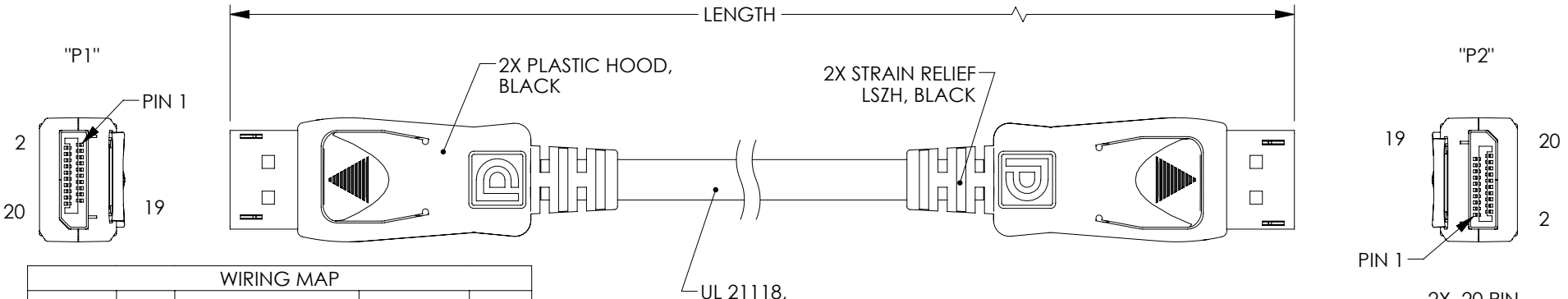

WIRING MAP				
CABLE	"P1"	SIGNAL NAME	COLOR	"P2"
TWISTED PAIR 1	1	ML_LANE 0(p)	BROWN	12
	2	GND	DRAIN	11
	3	ML_LANE 0(n)	WHITE	10
TWISTED PAIR 2	4	ML_LANE 1(p)	RED	9
	5	GND	DRAIN	8
	6	ML_LANE 1(n)	WHITE	7
TWISTED PAIR 3	7	ML_LANE 2(p)	GREEN	6
	8	GND	DRAIN	5
	9	ML_LANE 2(n)	WHITE	4
TWISTED PAIR 4	10	ML_LANE 3(p)	ORANGE	3
	11	GND	DRAIN	2
	12	ML_LANE 3(n)	WHITE	1
	13	GND	BROWN	13
	14	GND	RED	14
TWISTED PAIR 5	15	AUX CH(p)	BLUE	15
	16	GND	DRAIN	16
	17	AUX CH(n)	WHITE	17
	18	HOT PLUG DETECT	YELLOW	18
	19	DP_PWR RETURN	ORANGE	19
	20	N/A	N/C	20
	SHELL	GND	BRAID	SHELL

UL 21118,
(5) SHIELDED TWISTED PAIRS 30AWG, TINNED COPPER EACH WITH 30AWG DRAIN WIRE
(4) SINGLE CONDUCTORS 30AWG, TINNED COPPER WITH OVERALL ALUM/POLY FOIL SHIELD AND TINNED COPPER BRAID
JACKET: LOW SMOKE ZERO HALOGEN, BLACK
(NOM. DIA: .256" [6.50], MIN. BEND RAD: 2.56" [65.0])

2X, 20 PIN DISPLAYPORT MALE CONNECTOR

MODEL NUMBER	LENGTH	
	METERS	FEET
DPCAZMM-0.5	0.5	1.64
DPCAZMM-1	1.0	3.28
DPCAZMM-2	2.0	6.56
DPCAZMM-3	3.0	9.84

NOTES:

1. CABLE ASSEMBLY SHALL BE TESTED FOR CONTINUITY.
2. CABLE ASSEMBLY SHALL BE INDIVIDUALLY PACKAGED IN ACCORDANCE WITH L-COM SPECIFICATION PS-0031.
3. TEMPERATURE RATING: -10° TO +80°. (C)

REGULATORY COMPLIANCE:

EU RoHS DIRECTIVE (MOST RECENT RELEASED VERSION)

UNLESS OTHERWISE SPECIFIED, DIMENSIONS ARE IN INCHES [mm]

OVERALL CABLE LENGTH TOLERANCE:
≤12 [305] = +1 [25] / -0
>12 [305] ≤60 [1524] = +2 [51] / -0
>60 [1524] ≤120 [3048] = +4 [102] / -0
>120 [3048] ≤300 [7620] = +6 [152] / -0
>300 [7620] = +5% / -0

ALL OTHER DIMENSIONAL TOLERANCES:
.X = ± .2 [5]
.XX = ± .02 [.5]
.XXX = ± .005 [.13]
FRACTIONS ± 1/32
ANGLES ± 1°

THIRD-ANGLE PROJECTION

CONFIGURATION DETAILS OF UNDIMENSIONED FEATURES MAY VARY

COLOR VARIATIONS MAY OCCUR

APPROVALS	DATE
DRAWN BY D.FRISIELLO	06/10/2014
CHECKED BY S.LI	07/22/2014
APPROVED BY S.SMITH	07/22/2014

L-COM an INFINITE brand
50 High Street, West Mill,
North Andover, MA 01845 USA.
Phone: 1.800.341.5266
1.978.682.6936

CATEGORY: AUDIO/VIDEO

PRODUCT DESCRIPTION: CA DISPLAYPORT M/M LSZH

SIZE	CAGE CODE	DWG. NO.	REV.
A	43321	DPCAZMM-X	C

SCALE: NONE | CAD FILE: DPCAZMM-X.SLDDRW | SHEET 1 OF 1