DTM424

RFID read/write head with CAN interface and CANopen protocol

DTMHF GBRWCOUS03

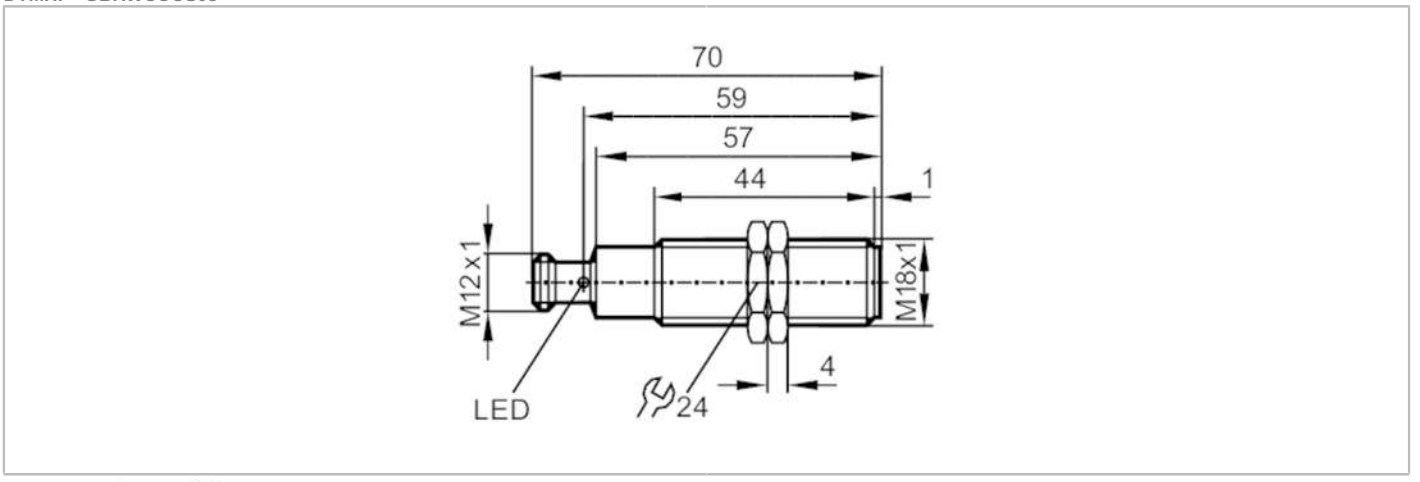

Application			
Radio approval for		USA; Canada; EU/RED; Australia; Japan; China; Taiwan; India; Singapore; Ukraine; Brazil	
Note on radio approval		The list of countries applying the European Radio Equipment Directive 2014/53/EU (RED) can be found under “Downloads”.	
Electrical data			
Operating voltage	[V]	9...32 DC	
Current consumption	[mA]	< 50 (24 V) / < 80 (12 V)	
Protection class		III	
Operating frequency	[MHz]	13,56	
RFID standard		ISO 15693	
Detection zone			
Distance write/read head front	[mm]	100	
Distance write/read head side	[mm]	50	
Distance to the ID tag	[mm]		≤ 18
Interfaces			
Communication interface		CAN	
CAN			
Protocol		CANopen	
Operating conditions			
Ambient temperature	[°C]	-40...85	
Storage temperature	[°C]	-40...85	
Protection		IP 67; IP 69K	
Tests / approvals			
Shock resistance		EN 60068-2-27	40 g 6 ms / repetitive
		EN 60068-2-27	50 g 11 ms / not repetitive
Vibration resistance		EN 60068-2-6	20 g 10...2000 Hz
MTTF	[years]	475	
Mechanical data			
Weight	[g]	131.5	

DTM424

RFID read/write head with CAN interface and CANopen protocol

DTMHF GBRWCOUS03

Housing		threaded type
Dimensions	[mm]	M18 x 1 / L = 70
Thread designation		M18 x 1
Materials		housing: stainless steel; Protective cover: PPS; LED window: PEI

Displays / operating elements

Display	Preoperational Mode	1 x LED, green lights
	Operational Mode	1 x LED, green flashing
	errors	1 x LED, red flashing
	tag communication	1 x LED, yellow lights

Remarks

Pack quantity	1 pcs.

Electrical connection

Connector: 1 x M12; coding: A

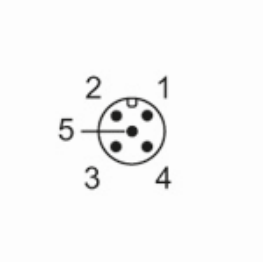

1	not used
2	U+
3	GND
4	CAN_H
5	CAN_L