IM5173

Inductive sensor with IO-Link

IMC3026-FRKG/IO/US-100

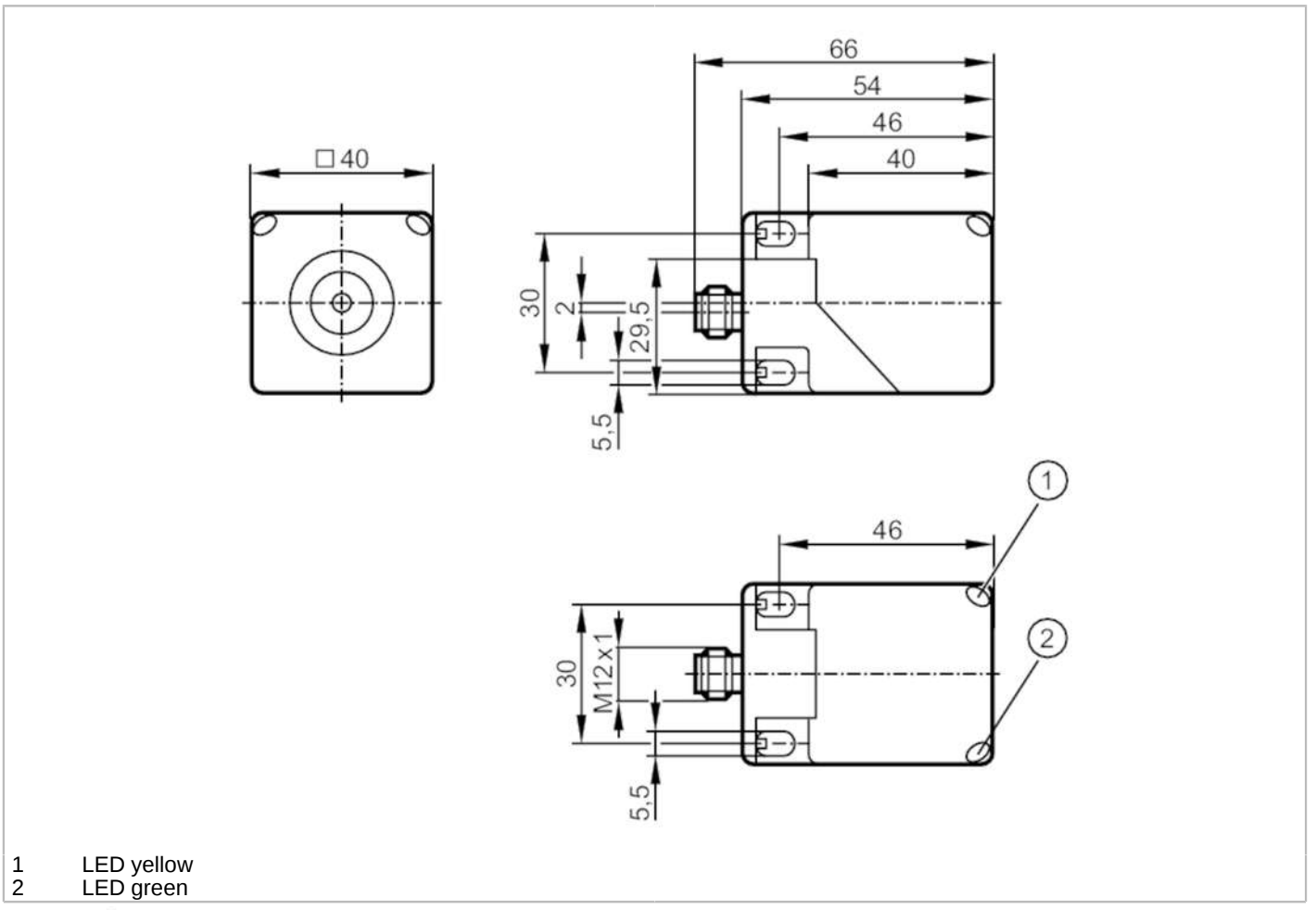

1 LED yellow
2 LED green

Product characteristics		
Electrical design		PNP/NPN; (parameterisable)
Output function		normally open / normally closed; (selectable)
Communication interface		IO-Link
Housing		rectangular
Dimensions	[mm]	40 x 40 x 54
Electrical data		
Operating voltage	[V]	10...30 DC
Current consumption	[mA]	< 20
Protection class		III
Reverse polarity protection		yes
Outputs		
Electrical design		PNP/NPN; (parameterisable)
Output function		normally open / normally closed; (selectable)
Max. voltage drop switching output DC	[V]	2.5
Permanent current rating of switching output DC	[mA]	100
Switching frequency DC	[Hz]	100

IM5173

Inductive sensor with IO-Link

IMC3026-FRKG/IO/US-100

Short-circuit protection			yes
Overload protection			yes
Detection zone			
Switch point IO-Link	[mm]		4.9...24.3; (parameterisable)
Measuring range IO-Link	[mm]		2.6...26
Accuracy / deviations			
Correction factor			steel: 1 / stainless steel: 0.8 / brass: 0.4 / aluminium: 0.4 / copper: 0.3
Hysteresis	[% of Sr]		3...15
Linearity error of analogue output	[%]		± 2 %; (of the final value of the measuring range)
Repeatability analogue output	[%]		± 1 %; (of the final value of the measuring range)
Temperature coefficient			± 0,2 %/K; (of the final value of the measuring range)
Interfaces			
Communication interface			IO-Link
Transmission type			COM2 (38,4 kBaud)
IO-Link revision			1.1
SDCI standard			IEC 61131-9 CDV
Profiles			Smart Sensor: Device Identification; Device Diagnosis; Device Teach Channel; Binary Data Channel; Process Data Variable
SIO mode			yes
Required master port type			A
Min. process cycle time	[ms]		3
Supported DeviceIDs		Type of operation	DeviceID
		Default	791
Operating conditions			
Ambient temperature	[°C]		-25...80
Protection			IP 67
Tests / approvals			
EMC		EN 61000-4-2 ESD	4 kV CD / 8 kV AD
		EN 61000-4-3 HF radiated	10 V/m
		EN 61000-4-4 Burst	2 kV
		EN 61000-4-6 HF conducted	10 V
		EN 55011	class B
MTTF	[years]		629
Embedded software included			yes
UL approval		Ta	-25...70 °C
		Enclosure type	Type 1
		power supply	Limited Voltage/Current
		UL Approval no.	A009
		File number UL	E174191
Mechanical data			
Weight	[g]		151.5
Housing			rectangular
Sensing face			5 positions selectable
Mounting			non-flush mountable

IM5173

Inductive sensor with IO-Link

IMC3026-FRKG/IO/US-100

Dimensions	[mm]	40 x 40 x 54
Materials		PA

Displays / operating elements

Display	operation	LED, green
	SIO mode	
	output stage supplied with current	LED, yellow lights
	IO-Link mode	
	target in measuring range	LED, yellow lights

Remarks

Pack quantity	1 pcs.

Electrical connection - plug

Connector: 1 x M12; coding: A; Moulded body: brass, white bronze coated



Connection

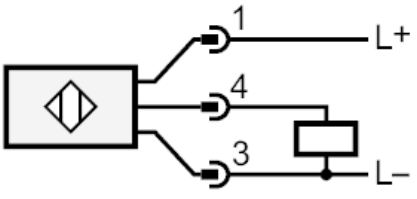

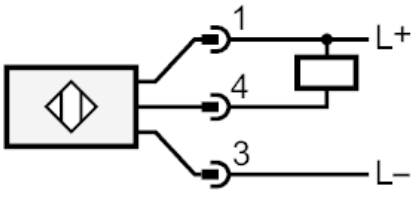

4: OUT / IO-Link
Factory setting : PNP / normally open