Features and Benefits

- Digital output signal
- Gear Tooth sensing capability
- No rotary orientation concerns
- Operates from -40°C to 125°C
- Short circuit protection
- Zero speed operation
- High speed (15kHz) operation
- 6.3-24 VDC operation
- Nickel-plated brass housing
- PVC jacketed cable



Sensor

Electrical Circuit

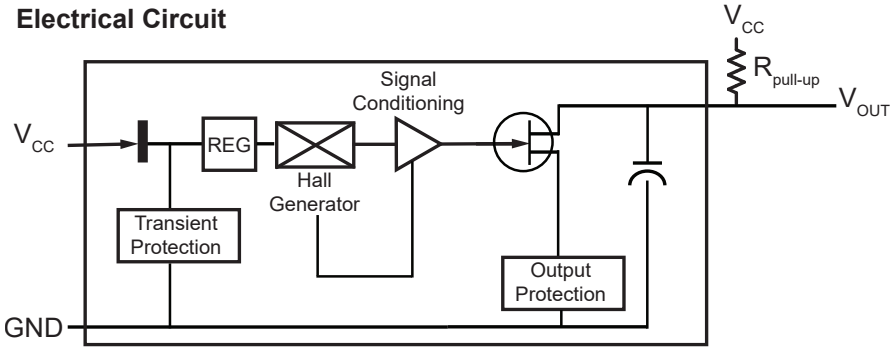

Output channels require customer supplied pull-up resistors unless internal pull-up option is selected. See Table 1.1 for recommended resistor values.

Note: A pull-up resistor is required on the open collector output to establish a quiescent voltage level. The pull-up resistor also provides faster rise times and improves noise immunity. Contact the factory for application assistance.

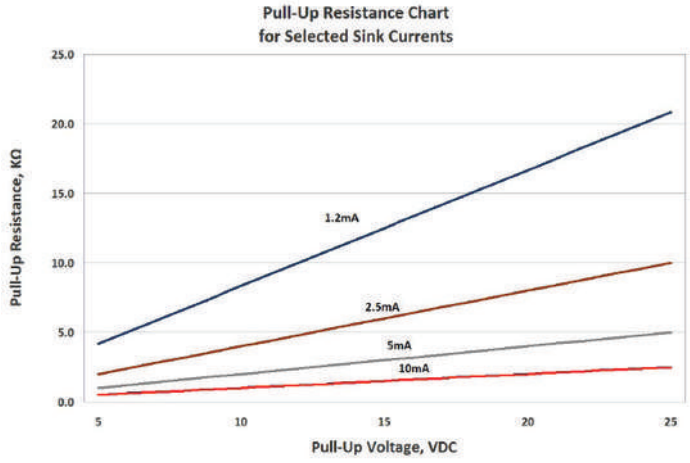

Table 1.1

Recommended Pull-Up Resistor Values			
	Supply Voltage		
Current, I_{sink}	5	12	24
1.2 mA	4.3K	10.0K	20.0K
2.5 mA	2.0K	4.7K	10.0K
5 mA	1.0K	2.4K	4.7K
10 mA	510Ω	1.2K	2.4K

I_{sink} is application dependent. It is recommended to use the lowest possible sink current when selecting a pull-up resistor.

Theoretical Pull-Up Resistor Calculation: $R_{pullup} = \frac{V_{supply}}{I_{sink}}$

Resistance values based on closest standard 5% resistor values

Absolute Maximum I_{sink} = 20mA

4.7 K pull-up is available as a standard option. If an alternative pull-up value is preferred, contact sales@phoenixamerica.com.

Phoenix America, INC
4717 Clubview Drive
Fort Wayne, IN 46804

Tel: (888)-801-1422
Local: (260)-432-9664
Fax: (260)-432-9967

www.phoenixamerica.com
sales@phoenixamerica.com
© Copyright PAI 2016 Rev. 6/8/2020

Physical Outline

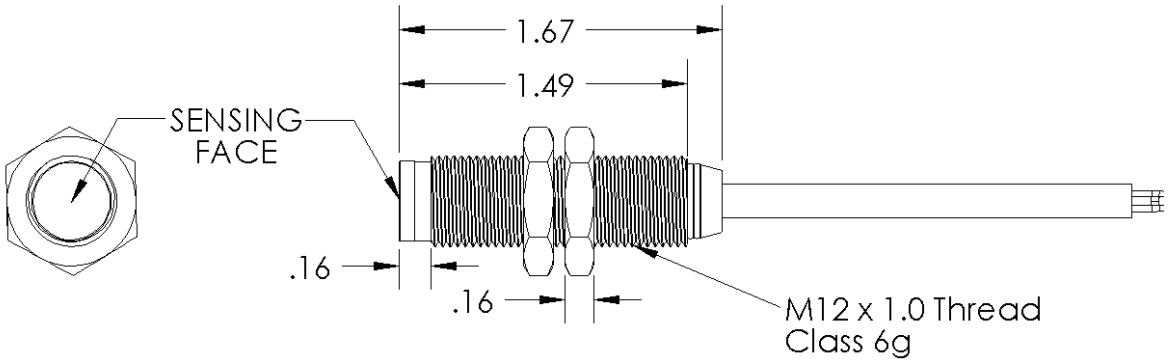

Application Example

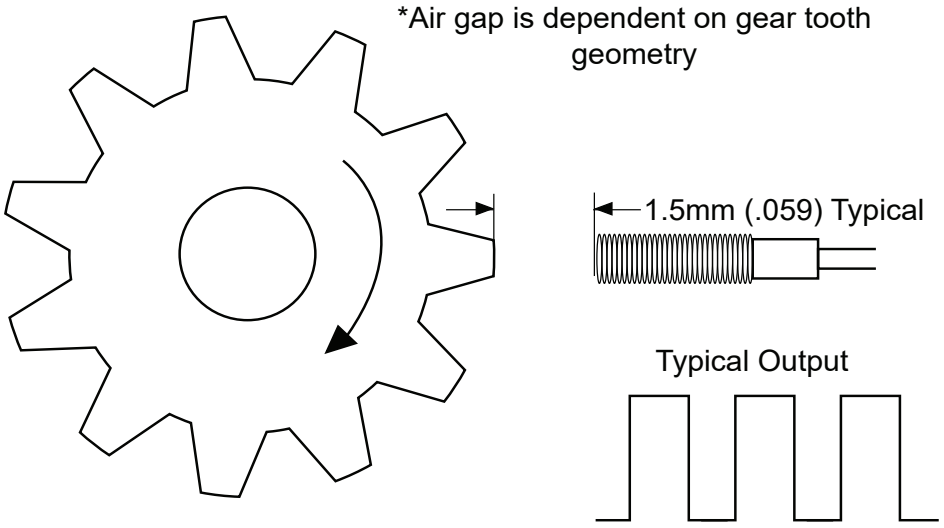

Output Waveforms

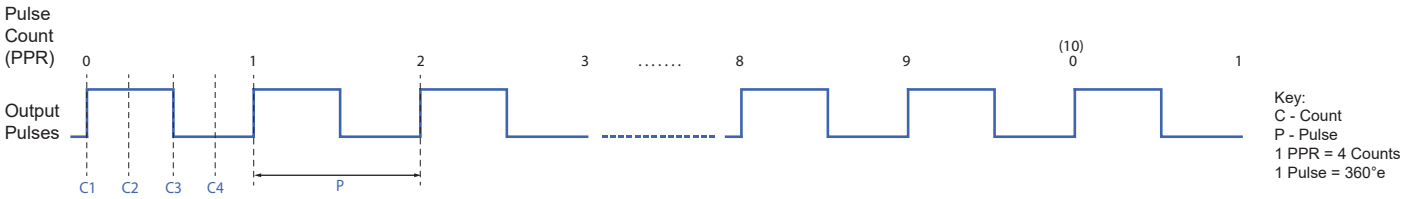

Phoenix America, INC
4717 Clubview Drive
Fort Wayne, IN 46804

Tel: (888)-801-1422
Local: (260)-432-9664
Fax: (260)-432-9967

www.phoenixamerica.com
sales@phoenixamerica.com
© Copyright PAI 2016 Rev. 6/8/2020

Electrical Characteristics *(T = -40 to 125°C)*

Table 3.1

Characteristic	Symbol	Test Condition	Limits			
			Min.	Typ.	Max.	Units
Supply Voltage	V_{CC}	Operating	6.3		24	VDC
Supply Current	I_S	Over V_{CC} and Temp. Range	1		6	mA
Reverse Supply Protection	V_{rev}	Operating			-24	VDC
Output Pull-up Voltage	V_{out}	Over V_{cc} and Temp. Range			24	VDC
Output Current	I_{out}	Operating			25	mA
Output Capacitance	C_{out}	Operating		2.2		nf
Bandwidth	BW	Operating			15	kHz
Magnetic Hysteresis	B_{hys}	Over V_{cc} and Temp. Range	40	55	100	G

Sensor Operation

Upon power up, the output of this CMOS device is reset to a high state. The open drain output only changes after a minimum bias level is detected. In the presence of a ferrous target such as the tooth of a gear, the magnetic bias field to the Hall element is at a maximum. When the ferrous target is moved away to its farthest position the bias field is at a minimum. The output will turn off when a maximum bias is detected and the bias reduces by a level equal to the device's hysteresis value. The output will turn on when a minimum bias field is detected and the bias increases by this same hysteresis level. The "self adjust" logic acts as a digital sample and hold circuit and is continuously operational. This feature helps to compensate for irregular magnetic signals due to worn gear teeth, non-concentric alignments or general air gap variation. This device does not require rotary alignment with the motion of the target.

Wiring

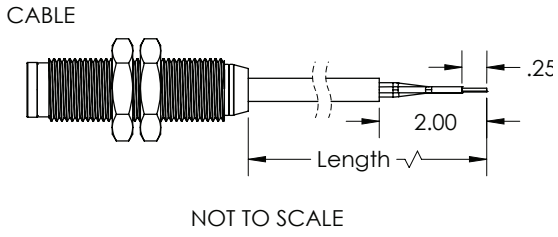

- 22 AWG
- PVC Insulation

Flying Leads Not Available

Table 3.2

Standard Wiring Color Code	
	Cable
Vcc	Brown
Gnd	Blue
Output	Black

Phoenix America, INC
4717 Clubview Drive
Fort Wayne, IN 46804

Tel: (888)-801-1422
Local: (260)-432-9664
Fax: (260)-432-9967

www.phoenixamerica.com
sales@phoenixamerica.com
© Copyright PAI 2016 Rev. 6/8/2020

Connector Options

Aptiv (Delphi-Packard) Metri-Pack 150
(Male Terminals)

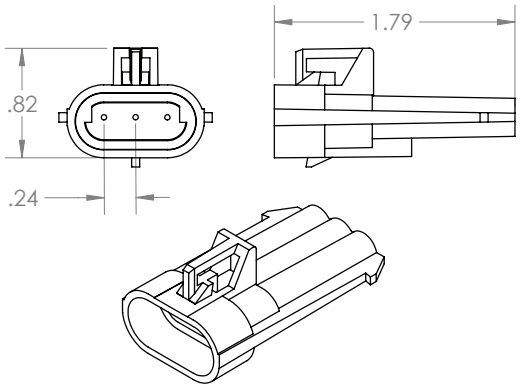

Aptiv (Delphi-Packard) Metri-Pack 150
(Female Terminals)

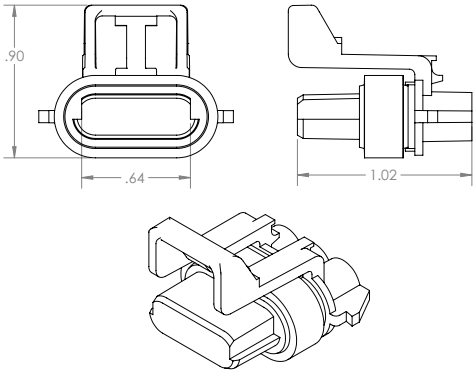

Deutsch DTM04-3P
(Male Terminals)

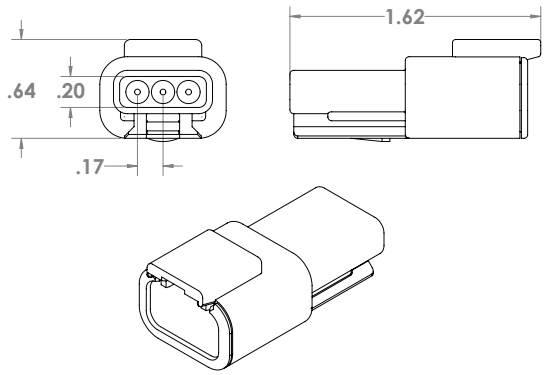

Deutsch DTM06-3S
(Female Terminals)

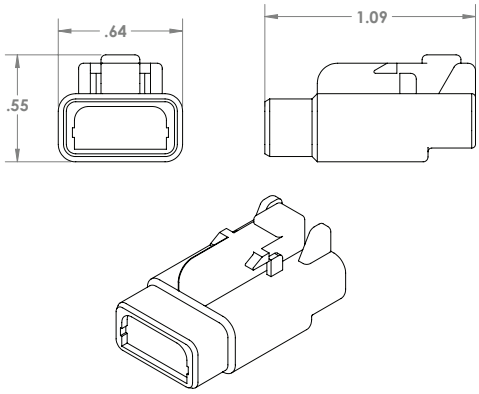

Table 4.1

Need a different connector? Contact sales@phoenixamerica.com.

Standard Pin Out and Color Code			
	Cable	Metri-Pack	Deutsch
+VCC	Brown	A	1
Output	Black	B	2
Ground	Blue	C	3

Cable Definition

- 3 Conductor 18 AWG 41/34 tinned copper with PVC insulation
- 0.032” thick Black PVC Jacket AWM Style 2464 0.240” O.D.

Contact sales@phoenixamerica.com for alternative wire and cable options.

Phoenix America, INC
4717 Clubview Drive
Fort Wayne, IN 46804

Tel: (888)-801-1422
Local: (260)-432-9664
Fax: (260)-432-9967

www.phoenixamerica.com
sales@phoenixamerica.com
© Copyright PAI 2016 Rev. 6/8/2020

Part Number Description

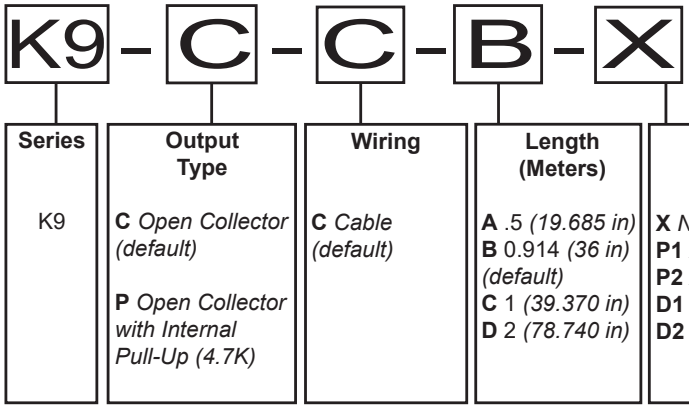

Series	Output Type	Wiring	Length (Meters)	Connector
K9	**C** *Open Collector (default)* **P** *Open Collector with Internal Pull-Up (4.7K)*	**C** *Cable (default)*	**A** .5 *(19.685 in)* **B** 0.914 *(36 in) (default)* **C** 1 *(39.370 in)* **D** 2 *(78.740 in)*	**X** *None (default)* **P1** *Aptiv/Packard Metri-Pack 150 (Male)* **P2** *Aptiv/Packard Metri-Pack 150 (Female)* **D1** *Deutsch DTM04-3P (Male)* **D2** *Deutsch DTM06-3S (Female)*

Example: K9-C-C-B-X

Phoenix America, INC
4717 Clubview Drive
Fort Wayne, IN 46804

Tel: (888)-801-1422
Local: (260)-432-9664
Fax: (260)-432-9967

www.phoenixamerica.com
sales@phoenixamerica.com
© Copyright PAI 2016 Rev. 6/8/2020