

Switch pos. query, LED-W front

Part no. **M22-SWD-LED-W**

Article no. **115966**

Powering Business Worldwide

Delivery programme

Product range			SWD RMQ connections
Basic function			LED elements
Function			for combination with RMQ-Titan operating elements M22-...
Fixing			Front fixing
Configuration			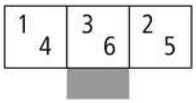
Colour			
			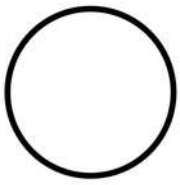
Connection to SmartWire-DT			yes

Approbationen

UL approval	Yes
CSA approval	Yes
UL File No.	E29184
UL CCN	NKCR
CSA File No.	2324643
CSA Class No.	3211-07
NA Certification	UL listed, CSA certified
Specially designed for NA	No

General

Standards			IEC/EN 61131-2 EN 50178
Dimensions (W x H x D)		mm	10 x 42 x 45
Weight		g	10
Mounting position			As required

Ambient conditions, mechanical

Protection type (IEC/EN 60529, EN50178, VBG 4)			IP20
Vibrations (IEC/EN 61131-2:2008)			
Constant amplitude 3,5 mm		Hz	5 - 8.4
Constant acceleration 1 g		Hz	8.4 - 150
Mechanical shock resistance (IEC/EN 60068-2-27) semi-sinusoidal 15 g/11 ms		Impacts	9
Drop to IEC/EN 60068-2-31	Drop height	mm	50
Free fall, packaged (IEC/EN 60068-2-32)		m	0.3

Electromagnetic compatibility (EMC)

Overvoltage category			Not applicable
Pollution degree			2
Electrostatic discharge (IEC/EN 61131-2:2008)			
Air discharge (Level 3)		kV	8
Contact discharge (Level 2)		kV	4
Electromagnetic fields (IEC/EN 61131-2:2008)			
80 - 1000 MHz		V/m	10

1.4 - 2 GHz		V/m	3
2 - 2.7 GHz		V/m	1
Radio interference suppression (SmartWire-DT)			EN 55011 Class A
Burst (IEC/EN 61131-2:2008, Level 3)			
Supply cables		kV	2
SmartWire-DT cables		kV	1
Radiated RFI (IEC/EN 61131-2:2008, Level 3)		V	10

Climatic environmental conditions

Operating ambient temperature (IEC 60068-2)		°C	- 30 - + 55
Condensation			Take appropriate measures to prevent condensation
Storage		°C	- 40 - 80
relative humidity, non-condensing (IEC/EN 60068-2-30)		%	9 … 95

SmartWire-DT network

Station type			SmartWire-DT slave
Address allocation			automatic
Status indication		LED	Green
Connections			Plug, 8-pole
Plug connectors			SWD4-8SF2-5

Fieldbus interface

Baud rate setting			automatic

Technische Daten nach ETIM 4.0

With integrated series resistor			No
Type of light element			LED
Lamp holder			without
Mounting type			Front mount
With integrated light element			YES
Voltage type for actuation			-
With integrated diode			No
With integrated transformer			No
Rated operating voltage Ue at AC 60 Hz		V	0
Light element			white
Rated operating voltage Ue at AC 50 Hz		V	0
Rated operating voltage Ue at DC		V	30
Connection type auxiliary circuit			Blade terminal

Dimensions

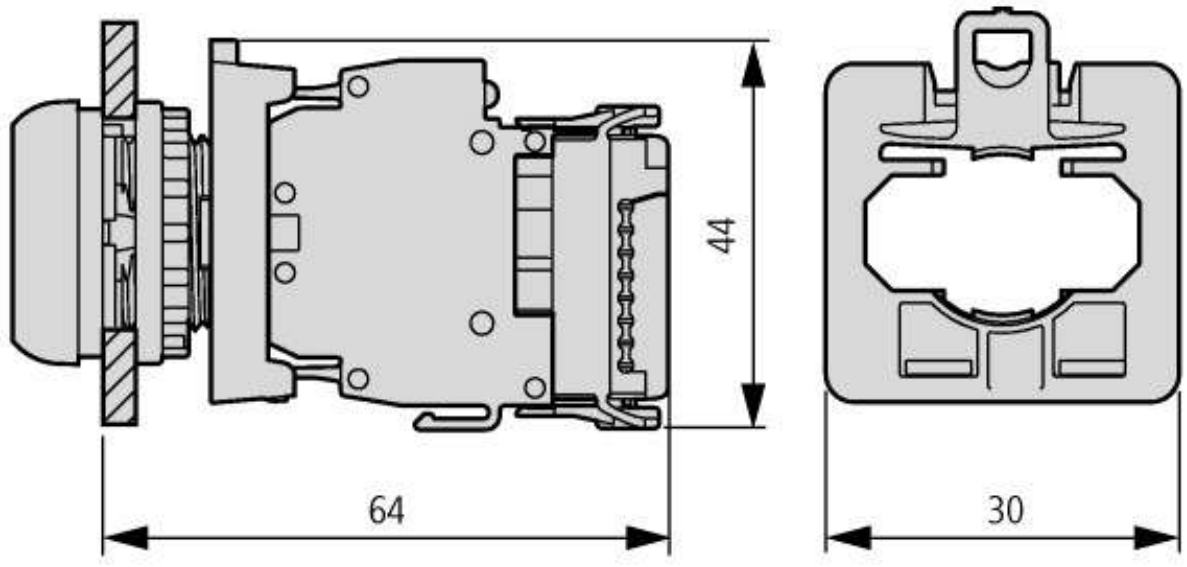

Pushbutton with function element

Additional product information (links)

IL04716004Z (AWA1160-2511) SmartWire-DT: RMQ-Titan	
IL04716004Z (AWA1160-2511) SmartWire-DT: RMQ-Titan	ftp://ftp.moeller.net/DOCUMENTATION/AWA_INSTRUCTIONS/IL04716004Z2010_10.pdf
MN05006001Z-EN(AWB2723-1613) SmartWire-DT, Unit	
MN05006001Z-DE (AWB2723-1613) SWD-Teilnehmer - Deutsch	ftp://ftp.moeller.net/DOCUMENTATION/AWB_MANUALS/MN05006001Z_DE.pdf
MN05006001Z-EN(AWB2723-1613) SmartWire-DT, Unit - English	ftp://ftp.moeller.net/DOCUMENTATION/AWB_MANUALS/MN05006001Z_EN.pdf
MN05006001Z-IT (AWB2723-1613) SmartWire-Darwin utenti - italiano	ftp://ftp.moeller.net/DOCUMENTATION/AWB_MANUALS/MN05006001Z_IT.pdf

© 11/2009 by Eaton Industries GmbH