Photoelectric Sensors

BOS 6K-UI-RH11-S75
Order Code: BOS02CL

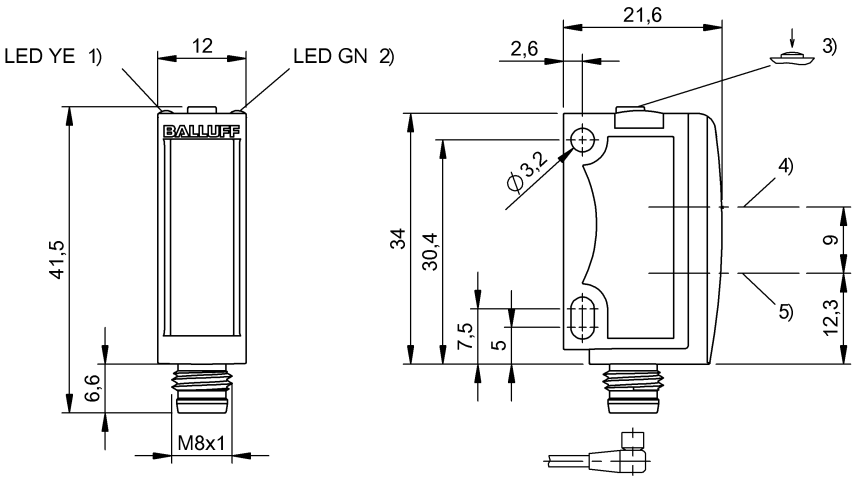

1) Output function, 2) Operating voltage, 3) Sn, light/dark, 4) Optical axis receiver, 5) Optical axis emitter

Basic features

Approval/Conformity	CE UKCA cULus WEEE
Basic standard	IEC 60947-5-2
Operating mode	SIO Mode IO-Link Mode
Principle of operation	Photoelectric sensor
Series	6K
Style	Square Connection 90°

Display/Operation

Adjuster	button
Display	LED green: Power LED yellow: Output active

Electrical connection

Connection	Connector, M8x1-Male, 4-pin
Polarity reversal protected	yes
Short-circuit protection	yes

Electrical data

Input function	Key disable on/off Same function as button
No-load current Io max. at Ue	30 mA
Operating voltage Ub	10...30 VDC
Protection class	II
Rated operating current Ie	100 mA
Rated operating voltage Ue DC	24 V
Ripple max. (% of Ue)	10 %
Switching frequency	1000 Hz
Turn-off delay toff max.	0.5 ms
Turn-on delay ton max.	0.5 ms

Environmental conditions

Ambient temperature	-20...60 °C
EN 60068-2-27, Shock	Half-sinus, 30 g_n, 11 ms, 3x6
EN 60068-2-6, Vibration	10...55 Hz, amplitude 0.5 mm, 3x30 min
IP rating	IP67, IP69
Storage temperature	-20...80 °C

Functional safety

MTTF (40 °C)	402 a

Photoelectric Sensors

BOS 6K-UI-RH11-S75
Order Code: BOS02CL

IO-Link

IO-Link Profil IDs	0x000E SSP 2.7 0x4000 Identification and Diagnosis
IO-Link function classes	0x800C Transducer Disable 0x8011 Multi Teach Two Value 0x8012 Multi Teach Dynamic 0x8101 Locator

Interface

Baud rate	COM2 (38.4 kBaud)
Interface	IO-Link-Device 1.1.3
Switching output	PNP/NPN/IO-Link NO/NC

Material

Housing material	ABS
Material sensing surface	PMMA

Mechanical data

Dimension	12 x 34 x 21.6 mm
Mounting part	Screw M3

Optical features

Beam characteristic	Divergent
Light spot size	27 x 27 mm at 400 mm
Light type	LED, red light
Principle of optical operation	Diffuse sensor, triangulation
Special optical feature	Background suppression
Switching function, optical	Light/dark switching
Wave length	632 nm

Range/Distance

Distance deviation 18 % max. (% of Sr)	3 %
Hysteresis H max. (% of Sr)	2 %
Range	3...400 mm
Rated operating distance Sn	400 mm

Remarks

The sensor is functional again after the overload has been eliminated.
Reference object (target): gray card, 100 x 100, 90 % remission, axial approach.
Only for applications per NFPA 79 (machines with a supply voltage of maximum 600 V). Use an R/C (CYJV2) cable with suitable properties for attaching the device.
For additional information, refer to user's guide.
Order accessories separately.
Do not press key using a pointed tool.
When using as a UL product the ambient temperature Ta max. must not exceed 50°C.
For more information about MTTF and B10d see MTTF / B10d Certificate

Indication of the MTTF- / B10d value does not represent a binding composition and/or life expectancy assurance; these are simply experiential values with no warranty implications. These declared values also do not extend the expiration period for defect claims or affect it in any way.

Connector Drawings



Wiring Diagrams (Schematic)

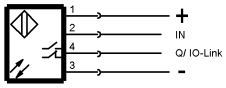

Opto Symbols

