Pomona®

Model 5300
BNC (F) To Triaxial 3 Lug (M)

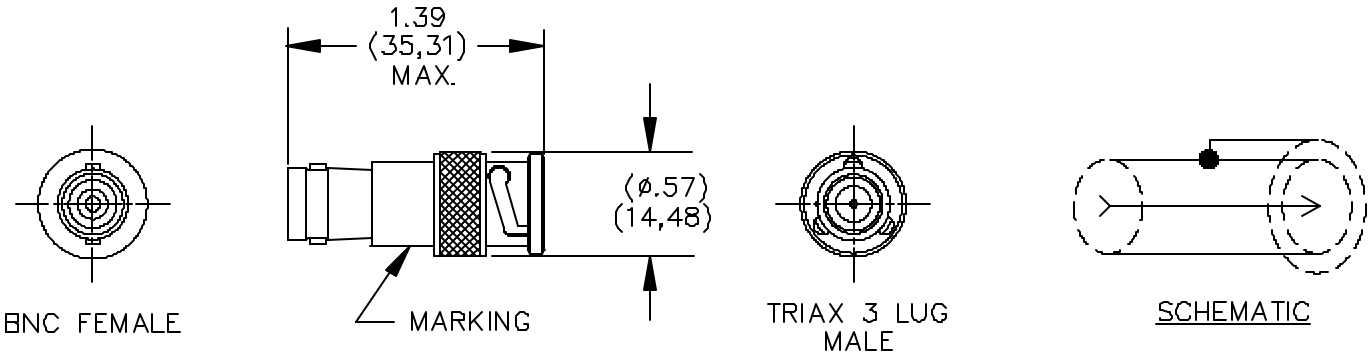

FEATURES:

- Provides an easy interface between a BNC (M) and a 3 lug triax (F)

MATERIALS:

Body and Fittings – Nickel Plated Brass, Male Contact – Gold Plated Brass, Female Contact – Gold Plated Beryllium Copper
Dielectric: Teflon per L-P-403
Finish: Body and Fittings: Tarnish resistant
Center & Intermediate Contacts: Gold Plated
Outer Contact: Tarnish resistant
Marking: "Pomona 5300"

RATINGS:

Operating Voltage: Shield/Earth: 30VAC/60VDC Max. For hands free testing in a controlled Voltage Environment: 500 VDC.
Frequency Range: DC to 500 MHz.

ORDERING INFORMATION: Model 5300

All dimensions are in inches and metric. All specifications are to the latest revisions. Specifications are subject to change without notice.
Registered trademarks are the property of their respective companies. Made in USA

Sales: 800-490-2361 Fax: 888-403-3360
Technical Assistance: 800-241-2060

Pomona*ACCESS* 90332 (800) 444-6785 or (425) 446-6010
More drawings available at www.pomonaelectronics.com