TELEDYNE LECROY
Everywhereyoulook™

HVFO108
High Voltage Fiber Optically-isolated Probe

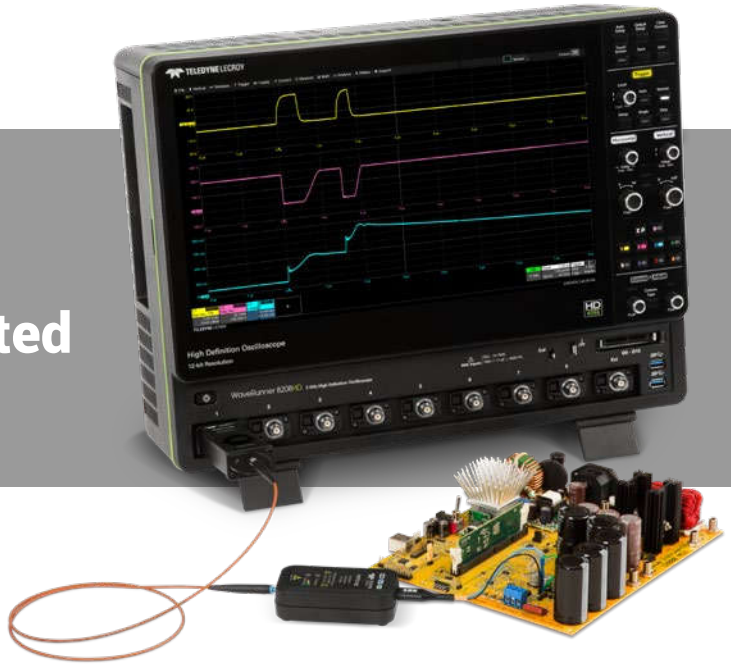

Key Features

150 MHz bandwidth

35 kV common-mode voltage rating (fiber optic isolation)

Superior Noise and Rejection
- **140 dB CMRR**
- **Low loop inductance**
- **Low attenuation**

Optical isolation reduces adverse loading of DUT

Selectable tips from ±1V to ±40V

Applications
- **Upper-side gate drive signal measurements**
- **Floating control signal or sensor voltage measurements**
- **EMC, EFT, ESD, and RF immunity testing and system optimization**
- **Any small signal measurements with high common-mode voltage**

The new HVFO108, with 150 MHz of bandwidth, is suitable for both Silicon and Silicon Carbide designs. It is designed to measure small signals floating on an HV bus and delivers excellent performance, has high CMRR, and provides optical isolation to reduce DUT loading.

Silicon Carbide Suitable

The new HVFO108, with 150 MHz of bandwidth, is perfect for device research engineers designing Silicon and Silicon Carbide devices, and system development engineers incorporating Silicon Carbide devices.

Optical Isolation is Best

Optical isolation between the probe tip and the oscilloscope input ensures safety against dangerous high voltage levels, reduces adverse DUT loading, provides faithful pulse response, and increases measurement confidence.

Compact, Simple, Affordable

The HVFO108 fits into tight spaces as well as tight budgets, without sacrificing performance.

Superior Noise Rejection

High CMRR (140 dB) provides more accurate representation of the measured signal despite the presence of high dV/dt or dA/dt events elsewhere in the circuit. The test lead is optimized to limit loop inductance and radiated pickup. Tip attenuations are optimized for a wide range of signal amplitudes.

Applications

The HVFO108 is ideal for upper-side gate drive measurements, floating control signal or sensor voltage measurements, EMC/EFT/ESD/ RF immunity testing and system optimization, or any small signal measurements with high common-mode voltage.

OPTIMIZED FOR SMALL SIGNAL FLOATING MEASUREMENTS

The HVFO108 faithfully reproduces upper-side gate drive signals without loading and distortion, allowing a clear view of the Miller effect. AC and DC sensor signals floating at a high voltage or in the presence of EMC, EFT, ESD, and RF disturbance signals can be acquired with high signal fidelity and correctly correlated to in-circuit and control activities.

The HVFO108 architecture is simple - a single laser and fiber optic cable is used for optical isolation and modulated signal + data communication, and multiple tips achieve different operating voltage ranges.

Amplifier/Modulating Transmitter
A frequency modulating optical transmitter is used for signal and data transmission across a fiber optic cable.

Battery-powered
A long-life Li-Ion battery provides power for ~6 hours of use. Re-charging is via a standard USB micro-B charging interface.

Built-in Safety
The USB micro-B interface also serves as the connection for the attenuating tip to preclude charging during circuit connection.

Selectable Attenuating Tips
Use one of five available tips for voltages from ±1V to ±40V

Flexible Connection to DUTs
Simplified pin socket termination for connection to square pins, solder-in terminals, or grippers..

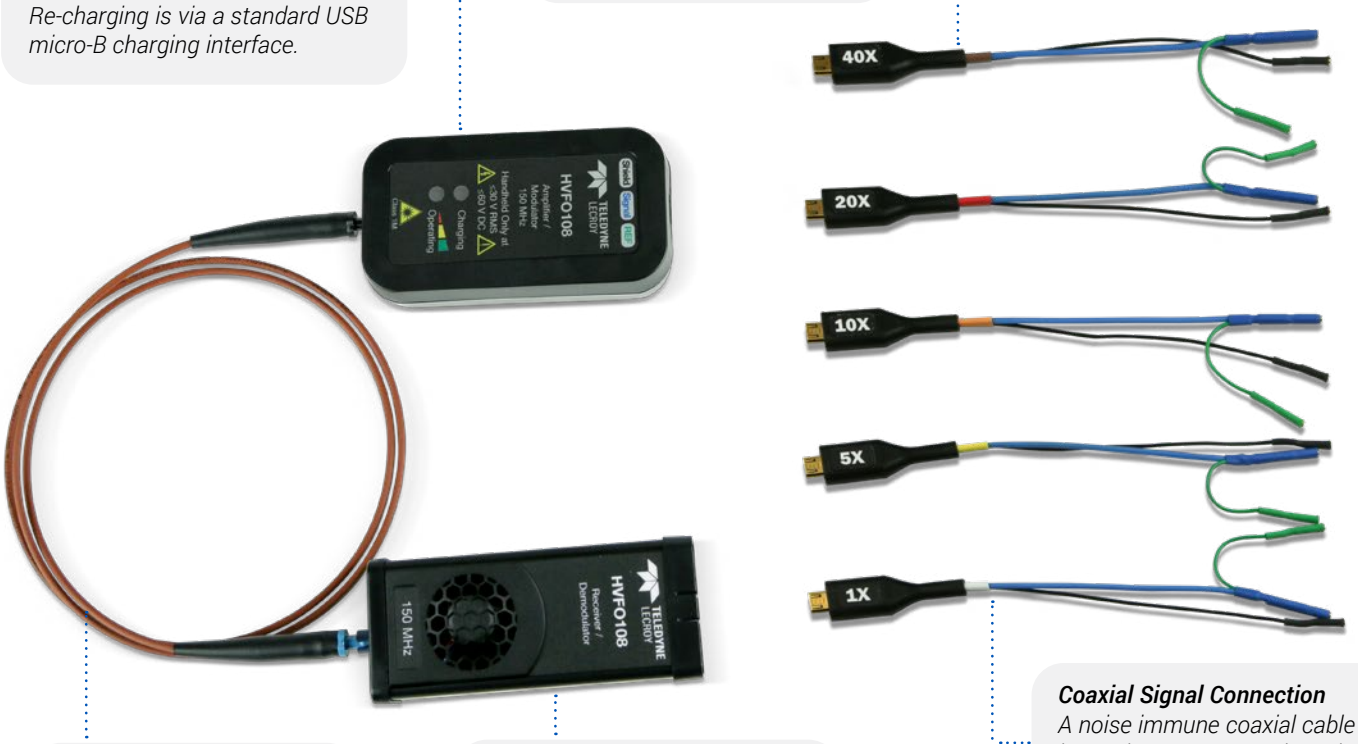

Fiber Optic Cable
A 1m long cable is provided (a 6m long cable is optional). Even longer cables may be supplied by the user.

De-modulating Receiver
The optical signal is received and demodulated to an electrical output to the oscilloscope with correct voltage scaling.

Coaxial Signal Connection
A noise immune coaxial cable (blue) is used to connect to the voltage signal.

Reference and Shield Connection
Separate connections are provided for Shield (black/grey) and Reference (green). The Reference wire carries the signal return current and the Shield carries current associated with the stray parasitic capacitances.

APPLICATION EXCELLENCE

Upper-side Gate Drive Voltage Measurement

A conventional HV differential probe will, at best, load the gate drive signal and, at worst, cause circuit malfunction. The HVFO108 is optimized for floating upper-side gate drive voltage measurements, while rejecting interference from low-side device switching transients .

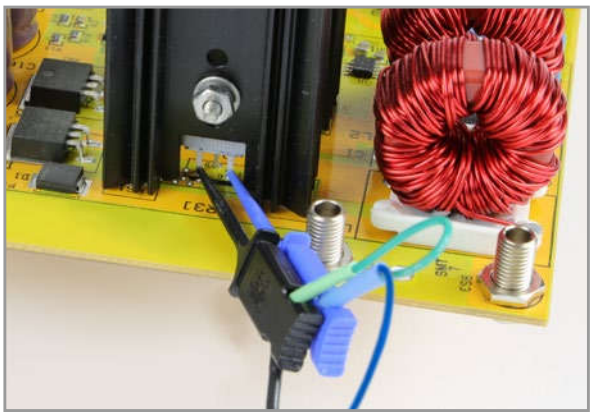

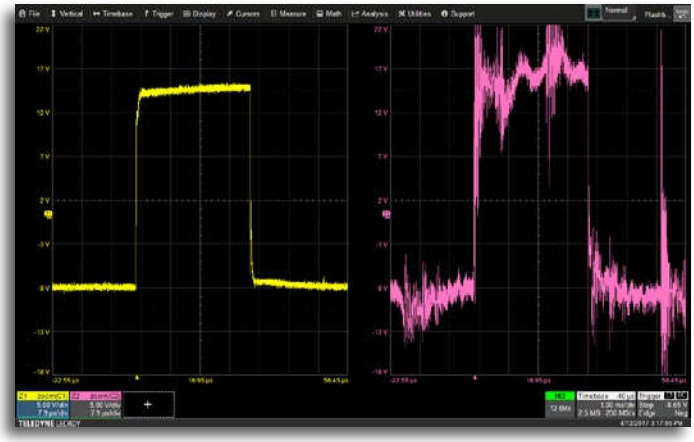

Upper-side gate drive signal capture comparison –
HVFO capture (yellow): classic, textbook shape
HV differential probe (magenta): more loading and lower-side device high dV/dt interference

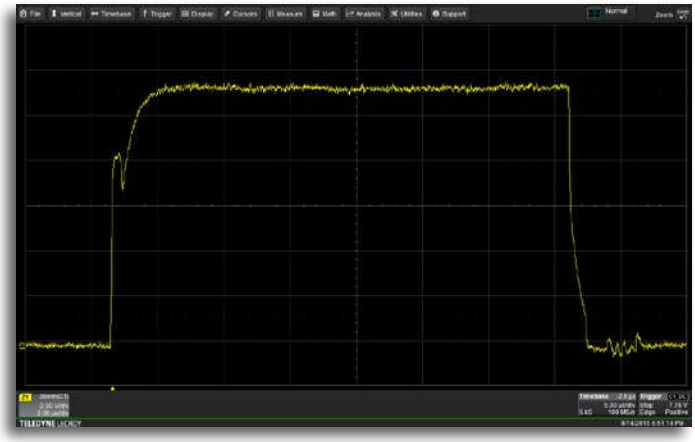

Current sinking into half-bridge phase in cascaded H-bridge – HVFO enables Miller effect to be observed clearly

Floating Control or Sensor Signal Measurements

The HVFO108 is ideal for measuring low voltage sensor voltages across its high impedance input leads. Its focus is to reduce the total load on the device under test (DUT) and providing superior signal fidelity, noise and rejection.

HV Fiber-optically Isolated Probe

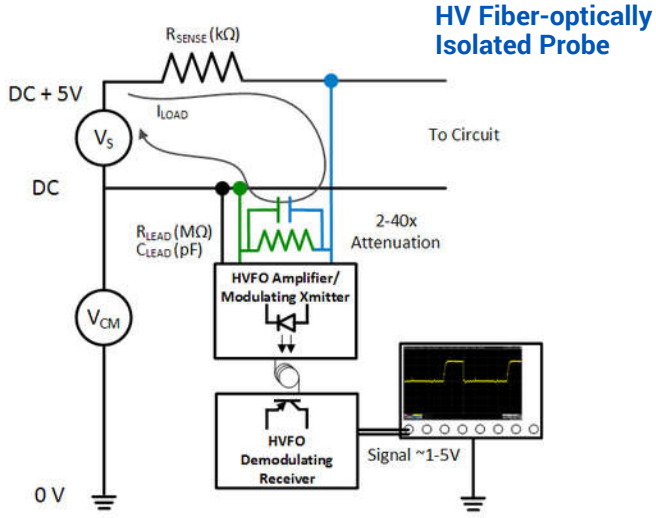

The HVFO measures only the small signal voltage with high probe input impedance; therefore, total DUT load is very small. Low tip loop inductance and 140 dB CMRR provide superior signal fidelity, noise and rejection.

Conventional HV Differential Probe

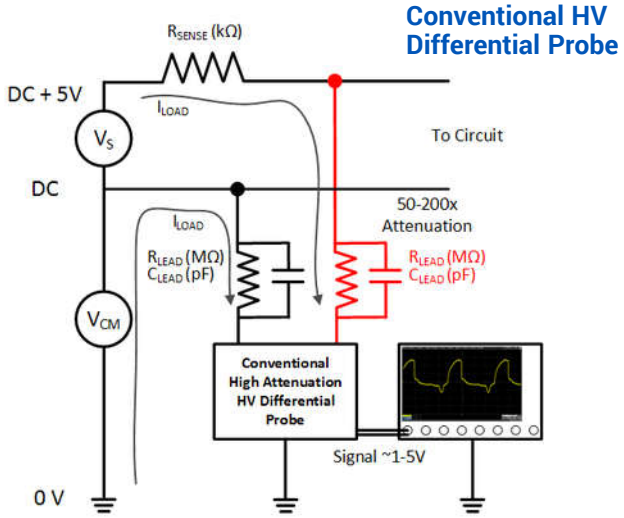

The HV differential probe measures the full common mode + sensor voltage. Therefore, the DUT load is ~100 times larger than with the HVFO. This excessive load will impact the signal fidelity and may even cause the circuit to malfunction.

SPECIFICATIONS & ORDERING INFORMATION

Electrical

Bandwidth	150 MHz (typical, with tip attached)
Rise Time (10-90%)	3.3 ns (typical)
Input Dynamic Range	±1V, ±5V, ±10V, ±20V, ±40V (DC+peak AC) respectively with 1X, 5X, 10X, 20X or 40X attenuating tips. All tips are purchased as accessories (none are included with HVFO108 probe).
Maximum Non-destruct Voltage	5 times the operating voltage rating (tip dependent)
Common Mode Voltage Range	±35 kV (DC+Peak AC) (not for hand-held use, with adequate spacing between probe components and earth ground)
Maximum Input Voltage to Earth	±35 kV (DC+Peak AC) (not for hand-held use, with adequate spacing between probe components and earth ground)
Maximum Safe Input Voltage	For hand-held use, 30 Vrms / 60 Vdc per IEC/EN 61010-031:2015
Offset	Offset capability determined by oscilloscope offset available in a given gain (V/div) setting after accounting for total probe attenuation (total probe attenuation is twice the tip attenuation).
Sensitivity	10 mV/div to 1 V/div (1X tip), 50 mV/div to 5 V/div (5X tip), 100 mV/div to 10 V/div (10X tip), 200 mV/div to 20 V/div (20X tip), 400 mV/div to 40 V/div (40X tip)
Gain Accuracy	2.5% (typical), 4% (guaranteed)
Input Impedance	1 MΩ || 34 pF (1X tip); 5 MΩ || 26 pF (5X tip); 8 MΩ || 23 pF (10X tip); 10 MΩ || 22 pF (20X tip); 10 MΩ || 22 pF (40X tip)
Input/Output Coupling	DC only
Interface	ProBus
Cable Length	1.25 m (4.1 feet) from input lead to oscilloscope connection (using included 1 meter fiber optic cable)
Battery	6 hour battery life (typical). 2.5 hour re-charge time (typical, with user-supplied dedicated USB charger). 5 hour re-charge time (typical) using supplied USB charging cable connected to oscilloscope USB port

Noise, Rejection, and Electromagnetic Compatibility (EMC)

CMRR (typical)	140 dB (100 Hz), 120 dB (to 1 MHz), 85 dB (to 10 MHz), 60 dB (to 60 MHz), 35 dB (to 150 MHz)
Noise (Probe only)	7 mVrms (1X tip), 35 mVrms (5X tip), 70 mVrms (10X tip), 140 mVrms (20X tip), 280 mVrms (40X tip)
Noise Density (Probe only)	570 nV/√Hz
Electrostatic Discharge (ESD) Immunity	8 kV contact discharge and 10 kV air discharge per IEC61000-4-2, criteria A
Radiated RF Electromagnetic Field Immunity	25 V/m (80 MHz to 2.7 GHz) per IEC61000-4-3, criteria A
Immunity to Conducted Disturbance Induced by RF Fields	10 V/m (150 kHz to 80 MHz) per IEC61000-4-6, criteria A

Environmental

Temperature	10°C to 40°C (operating), -20°C to 70°C (non-operating)
Humidity	5% to 80% RH (non-condensing) up to 30°C, decreasing linearly to 45% RH at 50°C (operating) 5% to 95% RH (non-condensing), 80% RH above 30°C, 45% RH above 50°C (non-operating)
Altitude	Up to 3000 m (operating), 10,000 m (non-operating)
Pollution Degree	2, Indoor Use Only

Certifications

CE Declaration of Conformity	Low Voltage Directive 2014/35/EU (IEC/EN 61010-031:2015) EMC Directive 2014/30/EU (IEC/EN 61326-1:2013) RoHS2 Directive 2011/65/EU

Ordering Information

Product Description	**Product Code**
High Voltage Fiber Optically-isolated Probe Models and Accessories	
High Voltage Fiber Optic Probe, 150 MHz Bandwidth. Includes soft-carrying case, Qty. 1 Amplifier/Modulating Transmitter, Qty. 1 Demodulating Receiver, Qty. 1 1m Fiber Optic Cable, Qty. 1 USB Charging Cable, Qty. 1 Micro-gripper set.	HVFO108
Attenuating Tips must be ordered separately.	
HVFO10X +/-1V (1x Attenuation) Universal Tip Accessory	HVFO100-1X-TIP-U
HVFO10X +/-5V (5x Attenuation) Universal Tip Accessory	HVFO100-5X-TIP-U
HVFO10X +/-10V (10x Attenuation) Universal Tip Accessory	HVFO100-10X-TIP-U
HVFO10X +/-20V (20x Attenuation) Universal Tip Accessory	HVFO100-20X-TIP-U
HVFO10X +/-40V (40x Attenuation) Universal Tip Accessory	HVFO100-40X-TIP-U
1m Spare Fiber Optic Cable Accessory	HVFO-1M-FIBER
6m Fiber Optic Cable Accessory	HVFO-6M-FIBER
NIST Traceable Calibration Certificate	HVFO108-CCNIST

Customer Service

Teledyne LeCroy oscilloscopes and probes are designed, built, and tested to ensure high reliability. In the unlikely event you experience difficulties, our digital oscilloscopes are fully warranted for three years and our probes are warranted for one year. This warranty includes:

- No charge for return shipping
- Long-term 7-year support
- Upgrade to latest software at no charge

TELEDYNE LECROY
Everywhereyoulook™

1-800-5-LeCroy
teledynelecroy.com

Local sales offices are located throughout the world.
Visit our website to find the most convenient location.

© 2020 Teledyne LeCroy, Inc. All rights reserved. Specifications, prices, availability, and delivery subject to change without notice.
Product or brand names are trademarks or requested trademarks of their respective holders.