THE INFORMATION CONTAINED IN THIS DRAWING IS THE SOLE PROPERTY OF L-COM, INC. ANY REPRODUCTION IN PART OR WHOLE WITHOUT THE WRITTEN PERMISSION OF L-COM, INC. IS PROHIBITED.

REVISIONS			
REV	DESCRIPTION	DATE	APPROVED
A	INTIAL RELEASE	08/12/2022	GUTTADAURO

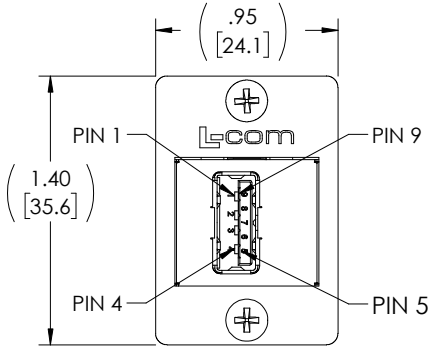

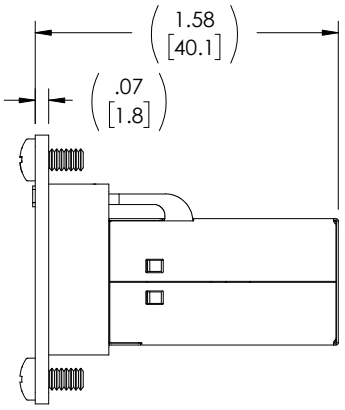

"J1"
USB 3.0 TYPE "A"
FEMALE CONNECTOR
30u" GOLD PLATED CONTACTS
NICKEL PLATED SHELL

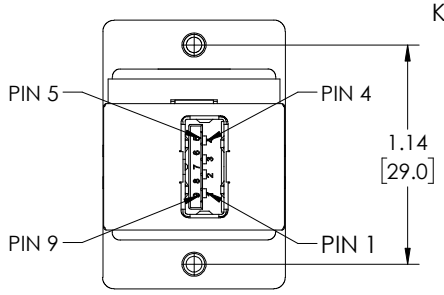

"J2"
USB 3.0 TYPE "A"
FEMALE CONNECTOR
30u" GOLD PLATED CONTACTS
NICKEL PLATED SHELL

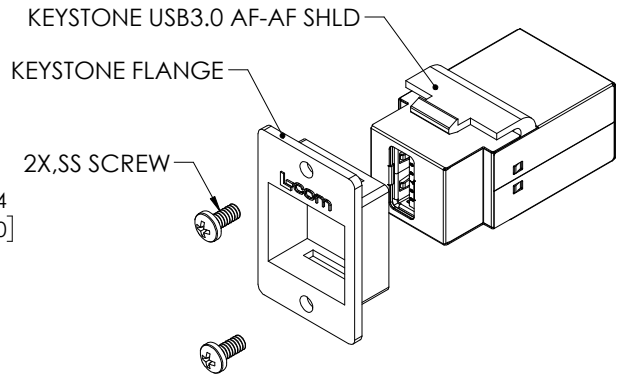

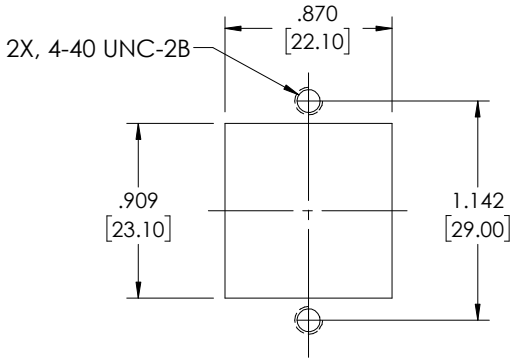

RECOMMENDED
PANEL CUTOUT

WIRING MAP

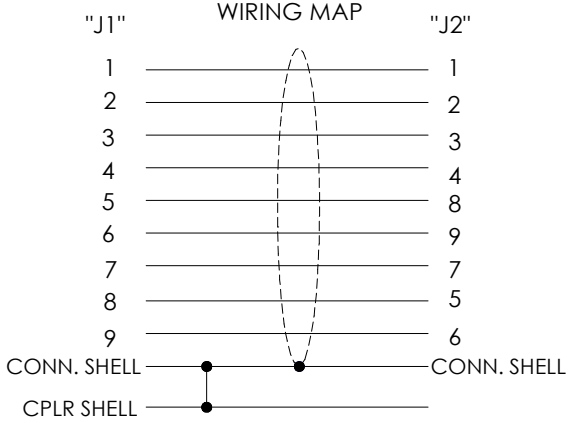

NOTES:

1. COUPLER HOUSING: ABS, UL94V-0 RATED, BLACK
   COUPLER SHIELDING: STAINLESS STEEL
   COUPLER PCB: GLASS FIBER EPOXY; FR-4,UL94 V-0
   KEYSTONE FLANGE: ZINC ALLOY; NICKEL PLATED

2. KIT INCLUDES(KIT SHOWN FULLY ASSEMBLED FOR CLARITY):
   1-KEYSTONE USB3.0 AF-AF SHIELDED
   1-ZINC ALLOY KEYSTONE FLANGE
   2-#4-40 UNC-2A x 1/4 LG STAINLESS STEEL SCREW

3. RATING:
   CURRENT: 1.8A (P1 and P4 CONTACT); 0.25A(OTHER CONTACT)
   OPERATING TEMPERATURE: -10°C TO +70°C.

4. COUPLER SHALL BE TESTED FOR CONTINUITY.

5. COUPLER KIT IS SHIPPED UN-ASSEMBLED AND SHALL BE PACKAGED IN ACCORDANCE WITH L-COM SPECIFICATION PS-0031.

UNLESS OTHERWISE SPECIFIED, DIMENSIONS ARE IN INCHES [mm]
OVERALL CABLE LENGTH TOLERANCE:
≤12 [305] = +1 [25] / -0
>12 [305] ≤60 [1524] = +2 [51] / -0
>60 [1524] ≤120 [3048] = +4 [102] / -0
>120 [3048] ≤300 [7620] = +6 [152] / -0
>300 [7620] = +5% / -0
ALL OTHER DIMENSIONAL TOLERANCES:
.X = ± .2 [5]
.XX = ± .02 [.5]
.XXX = ± .005 [.13]
FRACTIONS ± 1/32
ANGLES ± 1°
THIRD-ANGLE PROJECTION

APPROVALS	DATE
DRAWN BY B.ZHANG	01/18/2022
CHECKED BY GUTTADAURO	01/18/2022
APPROVED BY GUTTADAURO	01/18/2022

CONFIGURATION DETAILS OF UNDIMENSIONED FEATURES MAY VARY

COLOR VARIATIONS MAY OCCUR

L-com an INFINITE brand
50 High Street, West Mill,
North Andover, MA 01845 USA.
Phone: 1.800.341.5266
1.978.682.6936

CATEGORY
USB

PRODUCT DESCRIPTION
FLANGED PNL MNT CPLR KIT, USB3.0 AF-AF, SHLD

SIZE	CAGE CODE	DWG. NO.	REV.
A	43321	ECFU3KEY-AA-S	A

SCALE: NONE | CAD FILE: ECFU3KEY-AA-S.SLDDRW | SHEET 1 OF 1

T-Rev.D