E11917

Adapter socket

EDOGH050MSS00,7E05(M16)

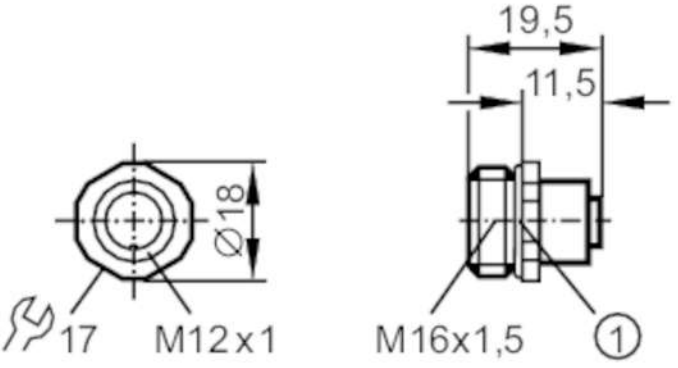

1 O-ring

Electrical data		
Operating voltage	[V]	< 125 AC/DC
Operating conditions		
Ambient temperature	[°C]	-25...85
Protection		IP 68
Mechanical data		
Weight	[g]	25.1
Mounting thread		M16
Materials		diecast zinc nickel-plated
Moulded-body material		diecast zinc, nickel-plated
Remarks		
Pack quantity		1 pcs.

E11917

Adapter socket

EDOGH050MSS00,7E05(M16)

Electrical connection

Cable: 0.7 m, PVC; 4 x 0.25 mm² + 1 x 0.5 mm²

Electrical connection - socket

Connector: 1 x M12; coding: A; Moulded body: diecast zinc, nickel-plated



Connection

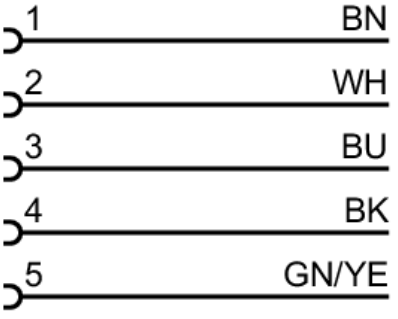

	Core colours :
BK =	black
BN =	brown
BU =	blue
GN/YE =	green/yellow
WH =	white