

Insulation Monitoring Relays
CM range

Power and productivity
for a better world™

ABB‘s insulation monitoring relays CM range

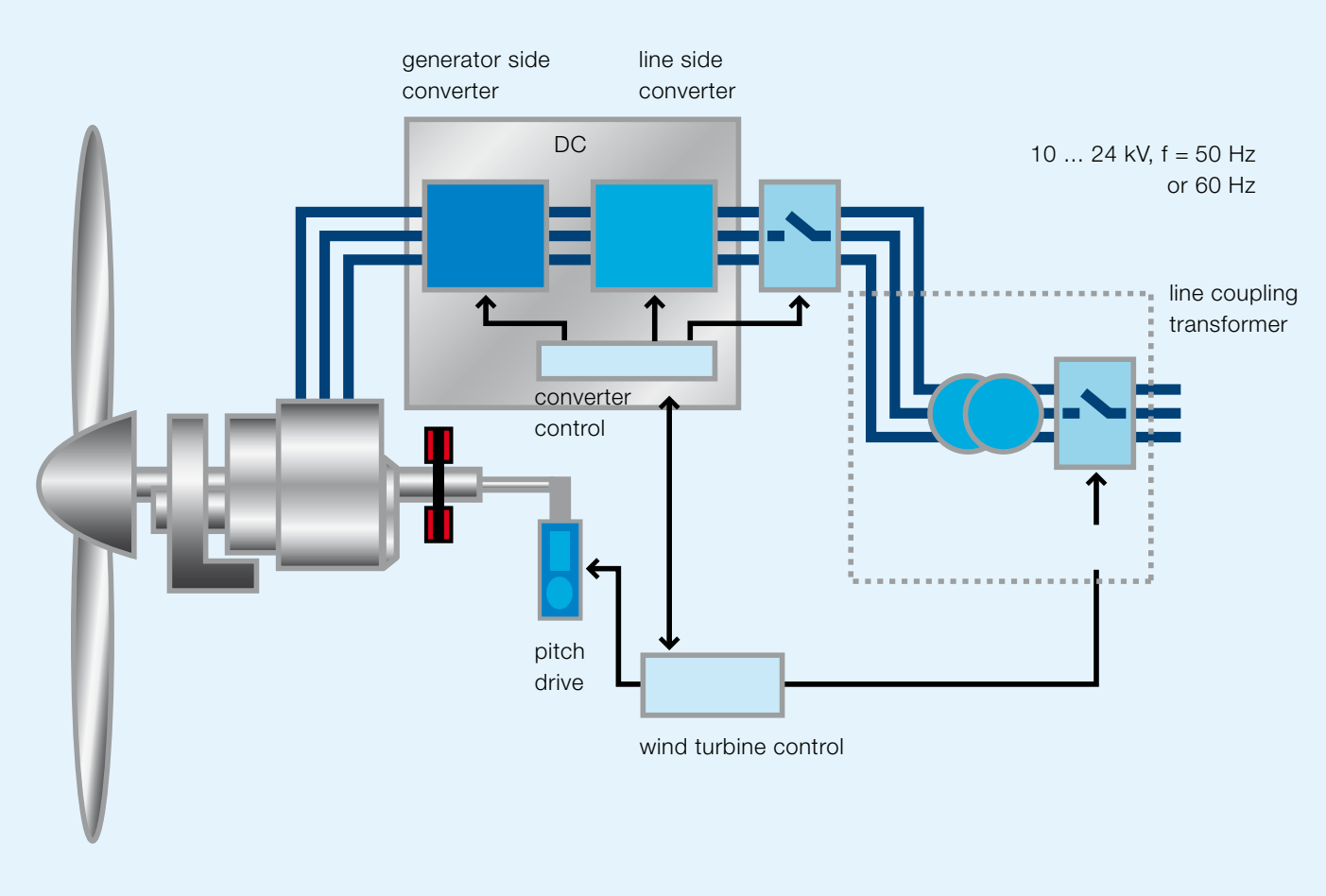

ABB developed a totally new range of insulation monitoring relays. With this new generation of measuring and monitoring relays of the CM-range ABB consolidates its strengths in innovative control products.

The new products are in accordance to IEC/EN 61557-1 and to IEC/EN 61557-8.

That means the monitoring relays can be used directly to measure the insulation resistance in unearthed AC and DC mains with a voltage up to 690 V AC and 1000 V DC!

Furthermore the products feature a new prognostic measuring principle which decreases the measuring and response time significantly.

Standardisation background:

– EC/EN 61557-1 “Electrical safety in low voltage distribution systems up to 1000 V a.c. and 1 500 V d.c. – Equipment for testing, measuring or monitoring of protective measures – Part 1: General requirements”

– IEC/EN 61557-8 “Electrical safety in low voltage distribution systems up to 1 000 V a.c. and 1 500 V d.c. – Equipment for testing, measuring or monitoring of protective measures – Part 8: Insulation monitoring devices for IT systems”

The field of applications for insulation monitors is quite big, it covers machines and generators, emergency power supplies and ship applications, railway applications and mobile power generators (air planes), industrial IT systems, printing applications and the renewable energy segments, like wind and photo voltaic.

The big challange is to meet the changing requirements of each single application. With the CM-IWx range ABB offer a modular and adjustable assortment of insulation monitors. In combination with a new measuring principle mains up to 690 V AC and 1000 V DC from 15 to 400 Hz can be monitored.

Wind

Wind turbines are completely unearthed applications. Depending on the technology (e.g double feed, full power, etc) both 3 phase mains and / or DC mains might to be monitored for insulation faults. The actual trend is to increase the DC voltage level.

ABB offers a perfect solution with its modular insulation monitor concept for voltages up to 690 V AC and 1000 V DC.

Ship

In ship building industry and retrofitting / maintenance two major trends can be seen: increasing the voltage level (up to 690 V) or increasing the frequency level (up to 400 Hz), both lead to a higher efficiency and sufficient supply power. But still the ship itself is an unearthed application designed for reliable operation on the harsh sea.

Solar

Solar is a rapidly growing segment. In PV (photo voltaic) applications the efficiency of each single cell is getting better and better, every day i.e. it is easier to create energy. Nevertheless the PV plant needs space and the DC strings have to be connected and protected. The new CM-IWx series is designed to meet solar requirements.

Crane

Very often transportable construction cranes are totally isolated. ABB offers a solution for each function in the crane application. In combination with the control gear products both individual / customized applications as well as standardised / serial applications can be designed and equipped.






Background information
Isolated supply systems

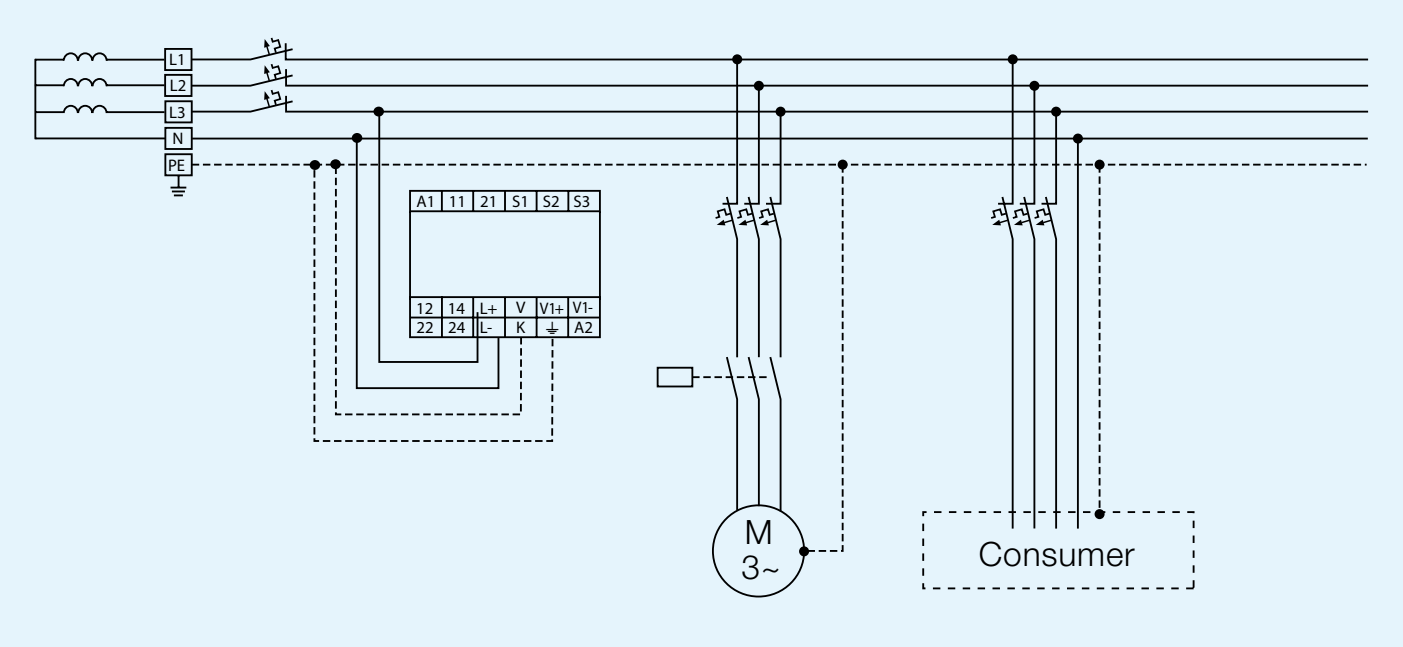

In electricity supply systems, an earthing system defines the electrical potential of the conductors relative to that of the Earth's conductive surface. The choice of earthing system has implications for the safety and electromagnetic compatibility of the power supply. Note that regulations for earthing (grounding) systems vary considerably among different countries.

A protective earth (PE) connection ensures that all exposed conductive surfaces are at the same electrical potential as the surface of the earth, to avoid the risk of electrical shock if a person touches a device in which an insulation fault has occurred. It ensures in case of an insulation fault (a "short circuit"), a very high current flows, which will trigger an over current protection device (fuse, circuit breaker) that disconnects the power supply.

A functional earth connection serves a purpose other than providing protection against electrical shock. In contrast to a protective earth connection, a functional earth connection may carry a current during the normal operation of a device.

Functional earth connections may be required by devices such as surge suppression and electromagnetic interference filters, some types of antennas and various measurement instruments. Generally the protective earth is also used as a functional earth, though this requires care in some situations.

The international standard IEC 60364 distinguishes three families of earthing arrangements, using the two-letter codes TN, TT and IT.

The first letter indicates the connection between earth and the power-supply equipment (generator or transformer):
T: direct connection of a point with earth (Latin: terra);
I: no point is connected with earth (insulation), except perhaps via a high impedance.

The second letter indicates the connection between earth and the electrical device being supplied:
T: direct connection of a point with earth
N: direct connection to neutral at the origin of installation, which is connected to the earth

TN-system

In a TN earthing system, one of the points in the generator or transformer is connected with earth, usually the star point in a three-phase system. The body of the electrical device is connected with earth via this earth connection at the transformer. Basically three different types of TN systems are distinguished: TN-S, TN-C, TN-C-S.

TN systems can be protected by a MCB (miniature circuit breaker). Any short circuit in the system will create sufficient energy to trip the MCB.

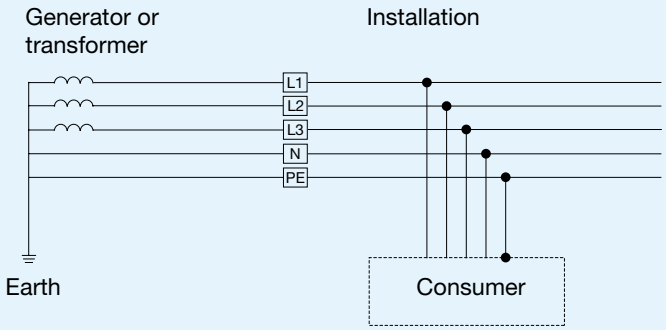

TT-system

In a TT earthing system, the protective earth connection of the consumer is provided by a local connection to earth, independent of any earth connection at the generator.

In case of an earth fault the resistance of the fault path back to the supply is too high for the branch circuit over current protection to operate (blow a fuse or trip a circuit breaker). In such case a residual current detector (RCD) is installed to detect the current leaking to ground and interrupt the circuit.

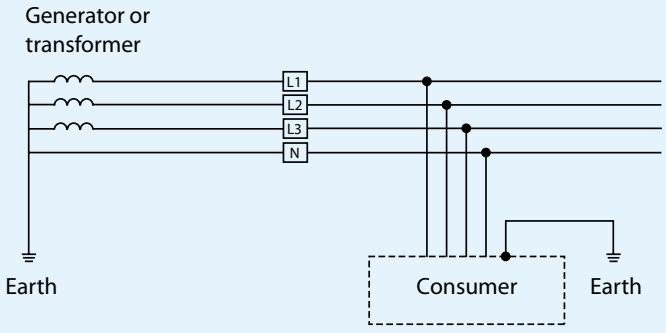

IT-system

In an IT network, the distribution system has no connection to earth at all, or it has only a high impedance connection. In such systems, an insulation monitoring device is used to monitor the impedance.

An insulation monitoring device monitors the ungrounded system between an active phase conductor and earth. It is intended to give an alert (light and sound) or disconnect the power supply when the impedance between the two conductors drops below a set value, usually 50 kΩ.

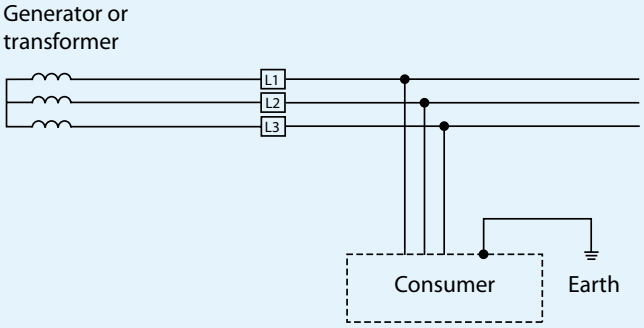

State of the art control products
Revolution in measuring principle



Isolated systems are used whenever a high reliability of the supply is needed, e.g. emergency lighting systems.

Due to the fact that the energy released in case of an earth fault will not be suffient enough to trip an MCB or RCB a different protection device is to be used in unearthed systems.

An insulation monitor constantly detects the insulation resistance to earth and releases a signal whenever the thresholds are passed.

Insulation monitoring relays are the only technical solution to detect an earth fault in an unearthed system.

ABB's offer at a glance

- Modular set up
- 3 products for AC and DC systems
- Direct connection to 690 V AC and 1000 V DC systems with the coupling module
- Frequency rating 15-400 Hz
- Interrupted wire monitoring
- Incorrect setting monitoring
- Safety on board by implemented system test after start-up
- Reset and test possibility at the front face or by control contact
- New prognostic measuring principle

Benefits at a glance

Additional monitoring functions CM-IWS.1 and CM-IWN.1

– When interrupted wire monitoring is activated, the CM-IWN.1 automatically monitors the network/measuring circuit connections L+ and L- when the system starts up. This can be repeated at any time by activating the test function. CM-IWN.1 and CM-IWS.1 cyclically monitor the measuring circuit connections and KE for wire interruption. In case of a wire interruption in one of the connections, the output relays switch to the fault state.

– In addition, the unearthed AC-, DC- or AC/DC system is monitored for inadmissible leakage capacitance. If the system leakage capacitance is too high, the output relay switches or the output relays switch to the fault state.

– Also incorrect settings that could cause a faulty function of the device are monitored. When the device detects such an incorrect setting, the output relay switches or the output relays switch to the fault state.

– Once the control supply voltage has been applied the insulation monitoring relay runs through a system test routine. The system is diagnosed and the settings are tested. If no internal or external faults are found after this test routine is completed, the output relays switch into the operational state.

– By pressing the front-face combined test/reset button a system test routine is executed. The output relays switch to the fault state as long as the test function is activated, the control contact S1-S3 is closed or the test functions are processed.

LED status and failure information CM-IWS.2, CM-IWS.1 and CM-IWN.1

Operating state	U: LED green	F: LED red	R: LED yellow
Start-up		OFF	OFF
No fault		OFF	– [1]
Pre-warning [2]			
Insulation fault (below threshold value)			– [1]
PE/KE wire interruption	–		– [1]
Network capacitance too high / invalid measurement result	–		– [1]
Internal system fault	–		– [1]
Setting fault [2] [3]			
Test function		–	– [1]
No fault after fault storage [4]	ON	–	

[1] With open-circuit principle - LED off,
With closed-circuit principle - LED on
[2] Only with CM-IWN.1
[3] Possible faulty setting: The threshold value for final switch-off is set at a higher value than the threshold value for pre-warning.
[4] The device has triggered after an insulation fault. The fault has been stored and the insulation resistance has returned to a higher value than the threshold value plus hysteresis.

State of the Art Technology – ABB' insolation monitoring relays

Assortment
CM-IWS.2 for AC systems up to 400 V AC



The CM-IWS.2 is used to monitor insulation resistance in accordance with IEC 61557-8 in pure IT AC systems. Measured are insulation resistances between system lines and system earth. When falling below the adjustable threshold values, the output relays switch into the fault state.

With CM-IWS.2 a superimposed DC measuring signal is used for measurement. From the superimposed DC measuring voltage and its resultant current the value of the insulation resistance of the system to be measured is calculated.

Characteristics:
- Supply voltage 24-240 V AC/DC
- Output 1 c/o (15-16/18), closed circuit principle
- Fault storage / latching configurable by control input
- Test: front face button or control input (S1-S3)
- Reset: front face button or control input (S2-S3)
- Measuring input L – PE with external voltages up to 400 V AC
- Measuring range: 1-100 kΩ

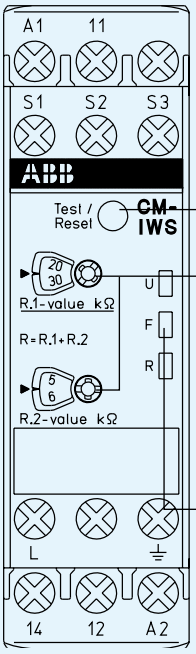

Front face test and reset button

Set-up and adjustment

Front face rotary switches for:

– Threshold value adjustment
  0, 10, 20, 30, 40, 50, 60, 70, 80, 90 kΩ in ten kΩ steps
– Threshold value adjustment
  1, 2, 3, 4, 5, 6, 7, 8, 9, 10 kΩ in one kΩ steps

Status indication

– ‘U’ green LED – supply voltage
– ‘F’ red LED – failure
– ‘R’ yellow LED – relay status

Connections, max. to 400 V AC, 45-65 Hz

Connection of measuring input
‘L’ to any of the conductors

2-wire AC system

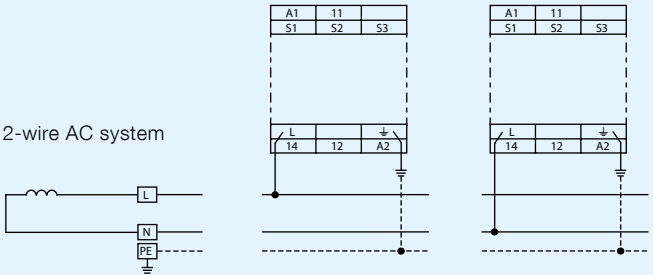

3-wire AC system

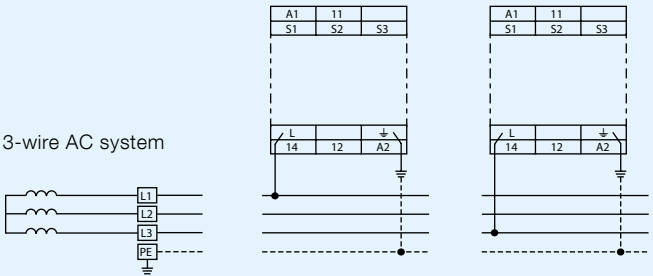

Connections, max. to 400 V AC, 45-65 Hz

Connection of measuring input
‘L’ to any of the conductors

4-wire AC system

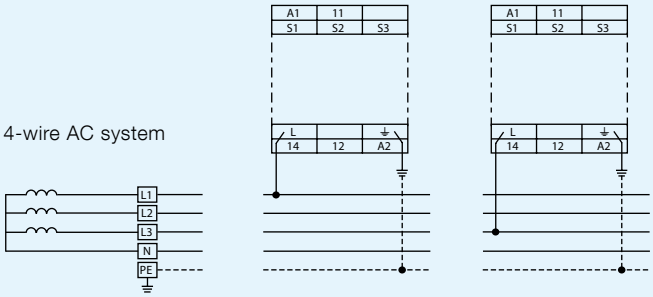

Assortment
CM-IWS.1 for systems up to 250 V AC and 300 V DC



The CM-IWS.1 and CM-IWN.1 serve to monitor insulation resistance in accordance with IEC 61557-8 in unearthed IT AC or DC systems. Measured are insulation resistances between system lines and system earth. When falling below the adjustable threshold values, the output relays switch into the fault state. With CM-IWS.1 und CM-IWN.1 a pulsating measuring signal is fed into the system to be monitored and the insulation resistance calculated.

Characteristics:
- Supply voltage 24-240 V AC/DC
- Output 1 c/o (15-16/18)
- Closed circuit principle
- Fault storage / latching configurable by control input
- Broken wire detection in measuring circuit
- Test: front face button or control input (S1-S3)
- Reset: front face button or control input (S2-S3)
- Measuring input L – PE with external voltages up to 250 V AC and 300 V DC
- Measuring range: 1-100 kΩ

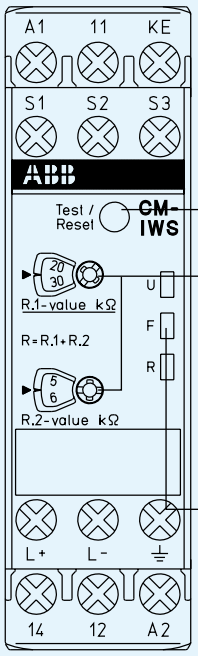

Front face test and reset button

Set-up and adjustment

Front face rotary switches for:

– Threshold value adjustment
  0, 10, 20, 30, 40, 50, 60, 70, 80, 90 kΩ in ten kΩ steps
– Threshold value adjustment
  1, 2, 3, 4, 5, 6, 7, 8, 9, 10 kΩ in one kΩ steps

Status indication

– ‘U’ green LED – supply voltage
– ‘F’ red LED – failure
– ‘R’ yellow LED – relay status

Connections, max. 250 V AC (15-400 Hz) or 300 V DC

2-wire AC system

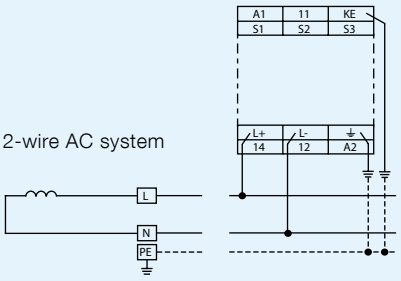

3-wire AC system

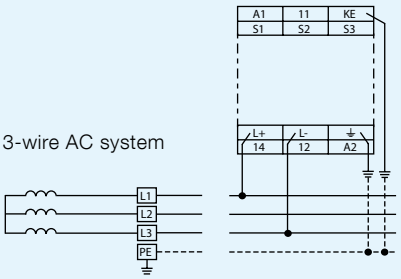

Always connect L+ and L- to two different lines / conductors, any of them

and KE use 2 separate wires for interrupted wire detection

Connections, max. 250 V AC (15-400 Hz) or 300 V DC

2-wire DC system

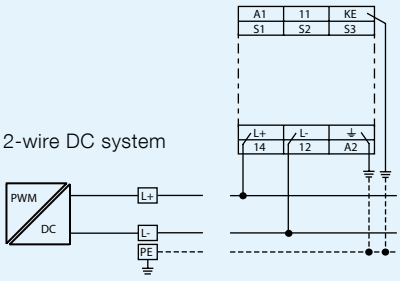

3-wire DC system

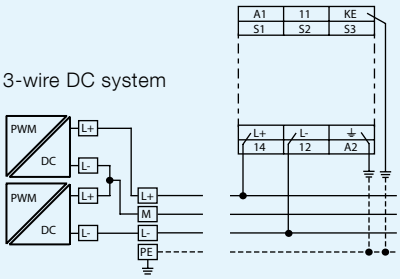

Always connect L+ and L- to two different lines / conductors, any of them

and KE use 2 separate wires for interrupted wire detection

CM-IWS.1
Connections, max. 250 V AC (15-400 Hz) or 300 V DC

4-wire AC system

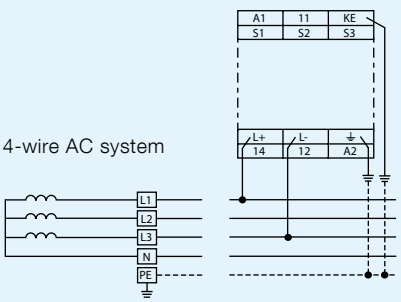

Always connect L+ and L- to two different lines / conductors, any of them

and KE use 2 separate wires for interrupted wire detection

Assortment
CM-IWN.1 for systems up to 400 V AC and 600 V DC



The pulsating measuring signal from CM-IWS.1 and CM-IWN.1 alters its form in dependence of the insulation resistance and the system leakage capacitance. From this altered form the change in the insulation resistance is forecast.

When the forecast insulation resistance corresponds to the insulation resistance calculated in the next measurement cycle and is smaller than the set threshold value, the output relays are activated or deactivated, depending on the device configuration. This measuring principle is also suitable for the detection of symmetrical insulation faults.

Characteristics:
- Supply voltage 24-240 V AC/DC
- Output 1 x 2 c/o or 2 x 1 c/o (15-16/18, 25-26/28)
- Open or closed circuit principle selectable
- Fault storage / latching configurable by control input
- Non volatile failure storage configurable
- Two threshold values (pre-warning) and final switch off configurable
- Interrupted wire detection in measuring circuit configurable
- Test: front face button or control input (S1-S3)
- Reset: front face button or control input (S2-S3)
- Measuring input L – PE with external voltages up to 400 V AC and 600 V DC
- Measuring range: 1-100 kΩ, 2-200 kΩ
- Coupling unit for connection to systems with voltages up to 690 V AC and 1000 V DC CM-IVN

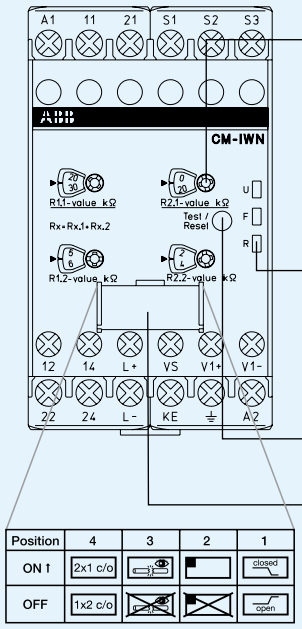

Set-up and adjustment

Front face rotary switches for:

– Threshold value adjustment
  0, 10, 20, 30, 40, 50, 60, 70, 80, 90 kΩ in ten kΩ steps
– Threshold value adjustment
  1, 2, 3, 4, 5, 6, 7, 8, 9, 10 kΩ in one kΩ steps

Status indication

– ‘U’ green LED – supply voltage
– ‘F’ red LED – failure
– ‘R’ yellow LED – relay status

Front face test and reset button

DIP switches for configuration of

– Open or closed circuit principle
– Non volatile failure storage
– One or two threshold values (pre-warning and final switch of)
– Interrupted wire detection

CM-IWN.1 and CM-IVN

Connections max. 690 V AC (15-400 Hz) or 1000 V DC

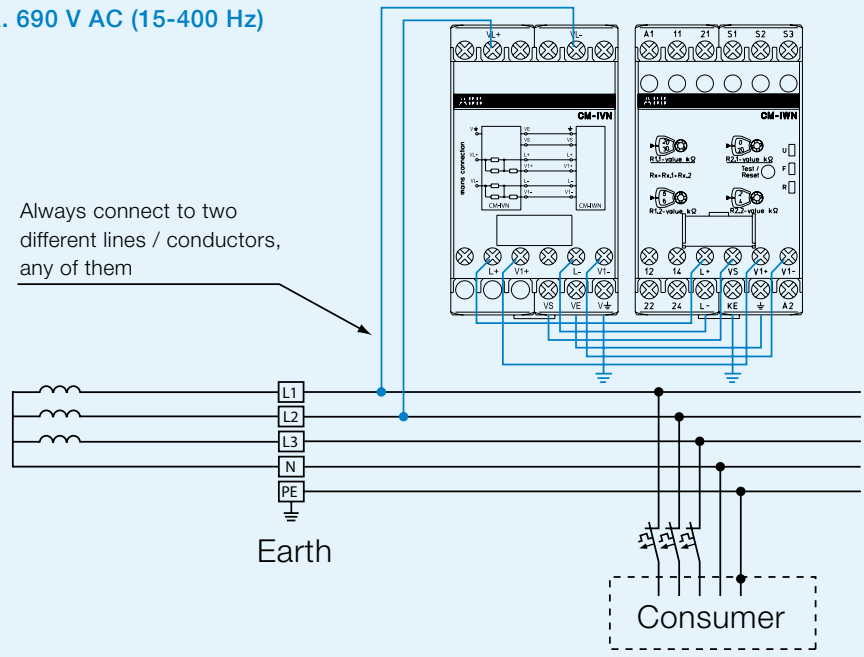

Assortment
CM-IVN coupling module for 690 V AC and 1000 V DC



The voltage levels in many DC applications are increasing constantly. Especially in the renewable energy sectors the actual voltages are between 800 and 1000 V DC.
Also in ship industries two trends can be seen: increase of voltage or increase of frequency up to 400 Hz, nevertheless still the ship is an unearthed application.

With this range of insulation monitors ABB offers a unique modular solution. All standard applications can be covered with a single standard device while for all special applications, i.e. high voltages simply an additional coupling module can be used.

Characteristics:
- Coupling unit for systems up to 690 V AC and up to 1000 V DC
- No auxiliary supply
- Just the adaption of the higher voltage to the insulation monitoring relay CM-IWN.1
- Only connectable to the CM-IWN.1

Selection table






Type	CM-IWS.2	CM-IWS.1	CM-IWN.1	CM-IVN
Order code	1SVR 630 670 R0200	1SVR 630 660 R0100	1SVR 650 660 R0200	1SVR 650 669 R9400
Sypply voltage				
24-240 V AC/DC	•	•	•	no auxillary supply
Measuring voltage				
250 V AC (L-PE)		•		
400 V AC (L-PE)	•		•	
690 V AC				•
300 V DC (L-PE)		•		
600 V DC (L-PE)			•	
1000 V DC				•
Measuring resistance				
1-100 kΩ	•	•	•	
2-200 kΩ			•	
Output contacts				
1 c/o	•	•		
1 x 2 c/o or 2 x 1 c/o			•	
Working principle				
	closed circuit	closed circuit	selectable	
Test				
Front face or control input	•	•	•	
Reset				
Front face or control input	•	•	•	
Fault storage / latching	configurable	configurable	configurable	
Non voltage storage			configurable	
Broken wire detection		•	configurable	
Threshold values			two, configurable	
Coupling unit			yes	CM-IWN.1

Approvals

	UL 508, CAN/CSA C22.2 No.14	pending / planned
	GL	pending / planned
	IEC/EN 60947-5-1,CB scheme	pending / planned
	GB14048.5 - 2001, CCC	pending / planned
	GOST	pending / planned

Marks

CE	CE	
	C-Tick	pending / planned

Contact us

ABB STOTZ-KONTAKT GmbH
http://www.abb.com/lowvoltage
-> Control Products -> Electronic Relays and Controls
-> Isolation Monitors

www.abb.com/contacts

Note:
We reserve the right to make technical changes or modify the contents of this document without prior notice. With regard to purchase orders, the agreed particulars shall prevail. ABB AG does not accept any responsibility whatsoever for potential errors or possible lack of information in this document.

We reserve all rights to this document and the subject matter and illustrations contained therein. Any reproduction, disclosure to third parties or utilisation of its contents – in whole or in part – is forbidden without prior written consent from ABB AG.

Copyright© 2010 ABB
All rights reserved

Order Number 2CDC 112 147 B0201 Printed in Germany (03/10-5-ZVD)

Power and productivity
for a better world™