A9052108

SOFT-CASE L

Unique case construction with "orientation towards the width" in pocket-format. Recessed area for membrane keyboards. Fixing possibilities for PCBs in top and bottom part. Optional intermediate rings provide more installation height. With soft TPE ring (accessory) protection class IP 54 possible.

Version
Without battery compartment

Supply
Top and bottom part, assembly kit



TECHNICAL DATA

Material	ABS (UL 94 HB)
Protection class	IP 54 opt. Necessary accessories: soft TPE intermediate ring, IP 40
Colour	lava
Standards	RoHS compliant, REACH compliant

The degree(s) of protection listed refer to the empty standard enclosures (without any modifications) and are in compliance with the EN 60529 standard.

Length	73 mm
Width	117 mm
Height	24 mm
PCB length, base	63 mm
PCB width, base	108 mm
PCB length, top	63 mm
PCB width, top	108 mm
Keypad length	51.5 mm
Keypad width	77.5 mm

Please take the dimensions from current parts. These are subject to material- and manufacturing-specific tolerances.

A9052108

SOFT-CASE L

PURCHASING DATA

Weight/1 part	58 g
Customs tariff number (OKW product)	39269097
Country of manufacture	Germany

CUSTOMISING OPTIONS

What else do you need to create your own personal product? We can supply our enclosures and tuning knobs fully modified to suit your electronic components and design requirements. Please advise for anything else we can do for you.

Customising options for A9052108


Machining



Printing



Laser marking



Decor foils


Special material


EMC shielding


Installation / Assembly of accessories

A9052108

SOFT-CASE L

ACCESSORY "INTERMEDIATE RING"



A9152011
Intermediate ring L
ABS (UL 94 HB)
matt chromed
76x120x21mm

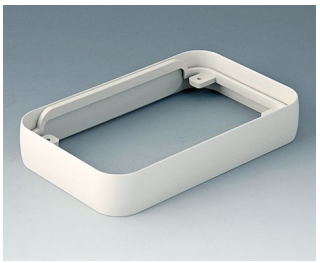

A9152017
Intermediate ring L
ABS (UL 94 HB)
off-white RAL 9002
76x120x21mm



A9152018
Intermediate ring L
ABS (UL 94 HB)
lava
76x120x21mm



A9152118
Intermediate protection ring L
SEBS (TPE)
volcano
76x120x21mm



A9152219
Intermediate ring L
PMMA (IR) (UL 94 HB)
black RAL 9005
76x120x21mm

ACCESSORY "WALL/HOLDER"



A9152048
Combi-Clip
ABS (UL 94 HB)
lava
45x27mm

A9052108

SOFT-CASE L

ACCESSORY "CARRYING"



A9100001
Ring eyelet
PA 6
volcano



A9152048
Combi-Clip
ABS (UL 94 HB)
lava
45x27mm

ACCESSORY "SCREWS"



A0304031
Self-tapping screws 2.2 x 5 mm
(PZ1)

ACCESSORY



A9152058
Tilt foot bar
ABS (UL 94 HB)
lava

Subject to technical modification without notice. © by OKW Gehäusesysteme, Buchen/Germany.

A 90 52 1. .

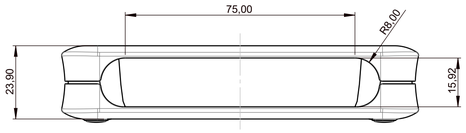



A-A

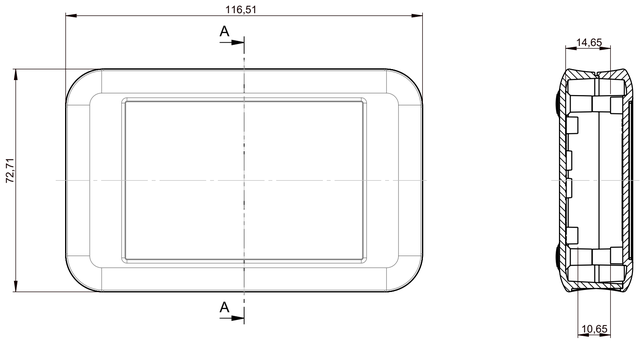

A-A
with battery component

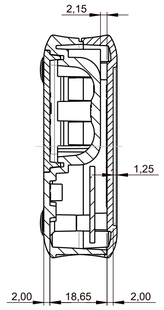

A-A
with battery component 9V

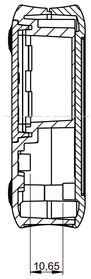

A 90 52 1. . mit Zwischenring (A 91 52 . . .)
A 90 52 1. . with intermediate ring (A 91 52 . . .)

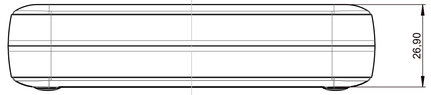



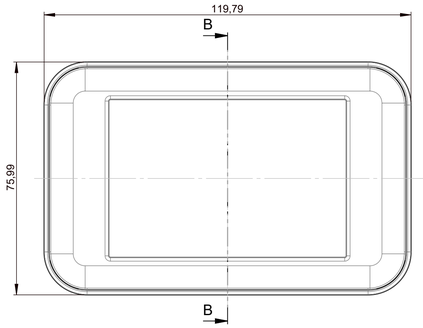

B-B

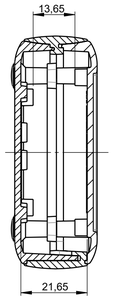

B-B
with battery compartment

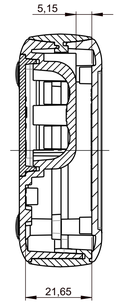

B-B
with battery compartment

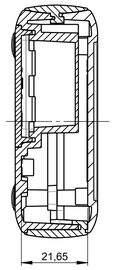

Oberteil
Top-Part

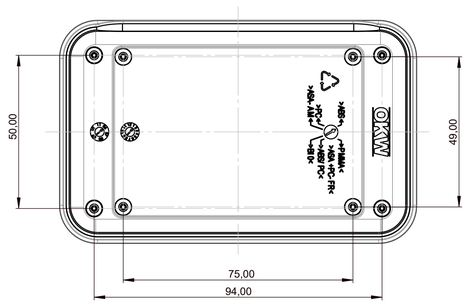

Unterteil
Bottom-Part

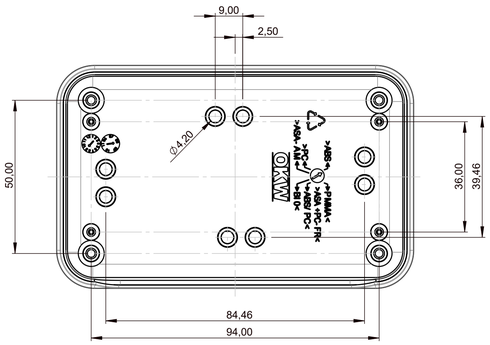

Unterteil mit Batteriefach
Bottom-Part with battery-compartment

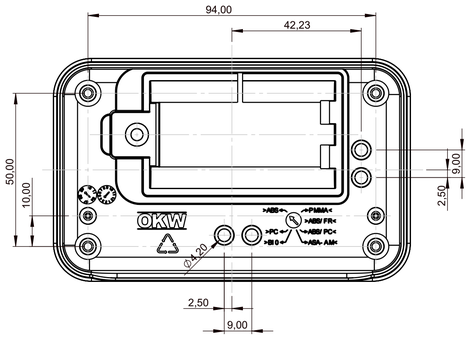

Unterteil mit Batteriefach 9V
Bottom-Part with battery-compartment 9V

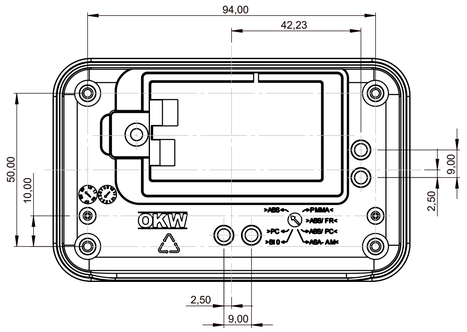

Platine OT
P C B

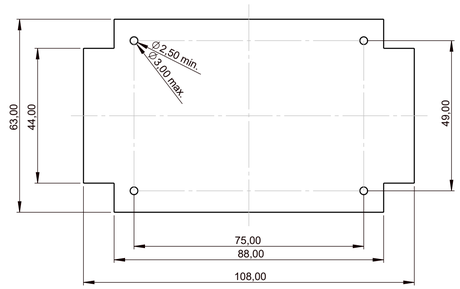

Platine UT
P C B

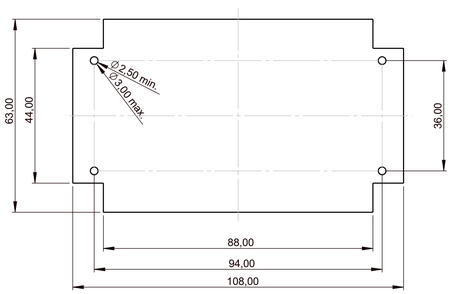

Folientastatur
membrane keyboard

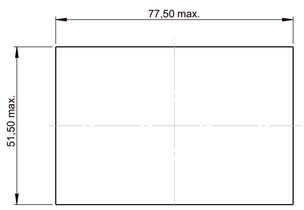

Platine UT Batteriefach
P C B battery-compartment

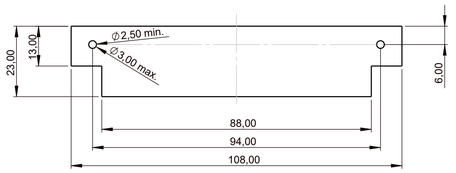

Platine OT Batteriefach
P C B battery-compartment

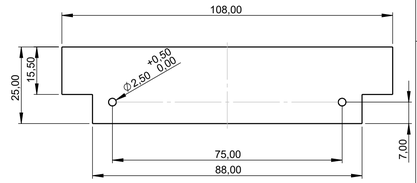

Bitte die Maße an aktuellen Teilen abnehmen.
Diese unterliegen material- und produktionsspezifischen Fertigungstoleranzen.

Please take the dimensions from current parts.
These are subject to material- and manufacturing-specific tolerances.

Informationskopie
wird nicht aktualisiert
Copy for Information
will not be updated

Erst. am:	04.04.2006	Toleranzen:		Status:	
Erst. von:	Herrlich	DIN 16901 T130		SERIENFREIGABE	DIN 6 Teil 2
Freig. am:	11.10.2013	Volumen:		Zeichnungsart:	
Freig. von:	D. Hasselbach			KUNDE	
Revision:	04				

Technische Änderungen vorbehalten. Irrtümer oder Druckfehler begründen keinen Anspruch auf Schadenersatz. Wichtige Einbaumaße bitte direkt mit dem aktuellen Produkt abstimmen.

Subject to technical modification without prior notice. Typographical and other errors do not justify any claim for damages. All dimensions should be verified using an actual moulded part.

Sous reserve de modifications techniques. Toute erreur ou faute d'impression ne justifie aucune demande d'indemnisation. Nous prions les clients de verifier les dimensions des composants avec les boitiers avant le montage.

This document contains proprietary information of OKW Gehäusesysteme GmbH and is tendered subject to the conditions that the information be retained in confidence not be reproduced or copied and not be used or incorporated in any product.

OKW GEHÄUSE SYSTEME

SOFT-CASE L
Vers. without / with intermediate ring

A9052***

M 1:1

Für dieses Dokument behalten wir uns alle Urheberrechte vor. Es darf auch auszugsweise weder vervielfältigt noch Dritten in irgendeiner Form zugänglich gemacht werden.

Dateiname: 00008217