Assisting the automation industry since 1986

User manual
METER
SWE-N55L

- Firmware: v.1.00 or higher
- Input type: 4-20 mA
- Supply from current loop 4-20 mA



CE

Read the user's manual carefully before starting to use the unit or software.
Producer reserves the right to implement changes without prior notice.

CONTENTS

1. BASIC REQUIREMENTS AND USER SAFETY....3
2. GENERAL CHARACTERISTICS....4
3. TECHNICAL DATA....4
4. DEVICE INSTALLATION....5
4.1. UNPACKING....5
4.2. ASSEMBLY....5
4.3. CONNECTION METHOD....6
4.4. MAINTENANCE....8
5. DESCRIPTION OF THE FRONT PANEL AND IR REMOTE CONTROLLER PUSH-BUTTONS....9
6. PRINCIPLE OF OPERATION....10
6.1. MEASUREMENT MODE....10
6.2. DETECTION OF THE PEAK VALUES....11
6.3. CONTROL OF THE RELAY OUTPUT....11
6.3.1. One threshold mode....13
6.3.2. Two thresholds mode....14
7. DEVICE PROGRAMMING....14
7.1. PROGRAMMING MENU....15
7.2. PARAMETERS EDITION....15
7.2.1. Numeric parameters (digit change mode)....15
7.2.2. Switch parameters (“LIST” type)....16
7.3. MENU DESCRIPTION....16
7.3.1. “rEL” menu....16
7.3.2. “inPt” menu....18
7.3.3. ”HOLd” menu....20
7.3.4. “Scod” parameter....21
7.3.5. “dEFS” parameter....21
7.3.6. “SErv” menu....21
7.4. MENU STRUCTURE....22
8. OVER-CURRENT PROTECTION....23
9. DISPLAYED VALUES CALCULATION....23
9.1. ADDITIONAL CALCULATIONS (USED CONVERSION CHARACTERISTIC)....23
9.1.1. Linear characteristic....24
9.1.2. Square characteristic....24
9.1.3. Square root characteristic....25
9.1.4. User defined characteristic....25
9.2. EXAMPLES OF CALCULATIONS....26
10. DEFAULT AND USER'S SETTINGS LIST....29

Explanation of symbols used in the manual:

- This symbol denotes especially important guidelines concerning the installation and operation of the device. Not complying with the guidelines denoted by this symbol may cause an accident, damage or equipment destruction.

IF THE DEVICE IS NOT USED ACCORDING TO THE MANUAL THE USER IS RESPONSIBLE FOR POSSIBLE DAMAGES.

- This symbol denotes especially important characteristics of the unit. Read any information regarding this symbol carefully

1. BASIC REQUIREMENTS AND USER SAFETY



- **The manufacturer is not responsible for any damages caused by inappropriate installation, not maintaining the proper environmental conditions and using the unit contrary to its assignment.**
- Installation should be conducted by qualified personnel. During installation all available safety requirements should be considered. The fitter is responsible for executing the installation according to this manual, local safety and EMC regulations.
- The unit must be properly set-up, according to the application. Incorrect configuration can cause defective operation, which can lead to unit damage or an accident.
- **If in the case of a unit malfunction there is a risk of a serious threat to the safety of people or property, additional, independent systems and solutions to prevent such a threat must be used.**
- Neighbouring and connected equipment must meet the appropriate standards and regulations concerning safety and be equipped with adequate overvoltage and interference filters.
- **Do not attempt to disassemble, repair or modify the unit yourself. The unit has no user serviceable parts. Defective units must be disconnected and submitted for repairs at an authorized service centre.**



- Do not use the unit in areas threatened with excessive shocks, vibrations, corrosive gasses and oils.
- Do not use the unit in areas where there is risk of explosions.
- Do not use the unit in areas with significant temperature variations, exposure ice.
- Do not use the unit in areas exposed to direct sunlight.
- Make sure that the ambient temperature (e.g. inside the control box) does not exceed the recommended values. In such cases forced cooling of the unit must be considered (e.g. by using a ventilator).



The unit is designed for operation in an industrial environment and must not be used in a household environment or similar.

2. GENERAL CHARACTERISTICS

The **SWE-N55L** is a simple digital wall-mounted indicator, equipped with one measurement input (current input, 4-20mA) used simultaneously as device power supply input. Current input has additionally overcurrent protection circuit, which protects standard resistor.

The **SWE-N55L** allows user to select a conversion characteristic of several kinds: linear, square, square root, and user defined (max.20 points length). Result is showed on 4-digit LED display. Displayed values range can be selected by user, from -999 to 9999, plus decimal point.

Optionally **SWE-N55L** can be equipped with bistable relay output. The device can be configured via IR remote controller.

IR remote controller is not a part of the **SWE-N55L** and must be ordered separately.

3. TECHNICAL DATA

Minimal supply current	3.5 mA, device supplied from current loop
Measurement loop voltage drop	max. 7 V
Current input	4÷20 mA overload protected, maximum input current about 50 mA
Current measurement accuracy	± 0,1% @ 25°C; ± one digit
Temperature stability	50 ppm / °C
Display range	-999 ÷ 9999, plus decimal point
Accepted prolonged input overload	20%
Relay output	bistable 0.5A/30V AC (cos φ = 1), min. switching delay: about 4 sec.
Display	LED, 4 digit, 13mm height, red
Data memory	non-volatile memory, EEPROM type
Protection level	IP 65
Housing type	wall mounted
Housing material	ABS + fibreglass
Housing dimensions	
without glands:	64 x 58 x 36 mm
with glands:	64 x 82 x 36 mm
Operating temperature (depending on version)	0°C to +50°C or -20°C to +50°C
Storage temperature (depending on version)	-10°C to +70°C or -20°C to +70°C
Fastening	to wall, 2 M3 bolts

Connection cable	
without relay	2 core cable (power supply)
with relay	4 or 5 core cable (2 power supply wires + 2 or 3 wires for relay)
Screws tightening max. torque	0,5 Nm
Max. connection leads diameter	2,5 mm^2
EMC	according to: PN-EN 61326-1



This is a class A unit. In housing or a similar area it can cause radio frequency interference. In such cases the user can be requested to use appropriate preventive measures.

4. DEVICE INSTALLATION

The unit has been designed and manufactured in a way assuring a high level of user safety and resistance to interference occurring in a typical industrial environment. In order to take full advantage of these characteristics installation of the unit must be conducted correctly and according to the local regulations.



- Installation should be conducted by qualified personnel.
- Read the basic safety requirements on page 3 prior to starting the installation.
- All installation works must be conducted with a disconnected power supply.

4.1. UNPACKING

After removing the unit from the protective packaging, check for transportation damage. Any transportation damage must be immediately reported to the carrier. Also, write down the unit serial number on the housing and report the damage to the manufacturer.

Attached with the unit please find:
- user's manual,
- warranty.

4.2. ASSEMBLY



- Disconnect the power supply prior to starting assembly.
- Check the connections are wired correctly prior to switching the unit on.



To install device on the wall, a pinholes should be made. Figure 4.1 presents dimensions of the device and distances between holes. The back side of the device has two mounting holes. This part of the case should be mounted to a wall by screws.

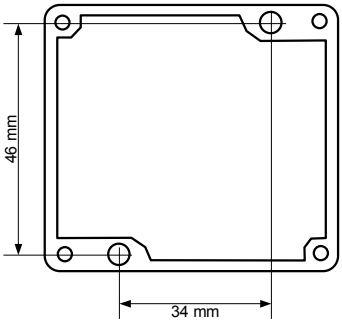

Figure 4.1. Distances between pinholes

4.3. CONNECTION METHOD

Caution

- Installation should be conducted by qualified personnel. During installation all available safety requirements should be considered. The fitter is responsible for executing the installation according to this manual, local safety and EMC regulations.
- Wiring must meet appropriate standards and local regulations and laws.
- Tighten the clamping screws. The recommended tightening torque is 0.5 Nm. Loose screws can cause fire or defective operation. Over tightening can lead to damaging the connections inside the units and breaking the thread.
- The unit is equipped with housing, cover and gland or M12 connector, protecting against water intrusion. Pay special attention to their correct tightening or clamping. In the case of any doubt consider using additional preventive measures (covers, roofing, seals, etc.). Carelessly executed assembly can increase the risk of electric shock.

Due to possible significant interference in industrial installations appropriate measures assuring correct operation of the unit must be applied. To avoid the unit of improper indications keep recommendations listed below.

– Avoid common (parallel) leading of signal cables and transmission cables together with power supply cables and cables controlling induction loads (e.g. contactors). Such cables should cross at a right angle.

– Contactor coils and induction loads should be equipped with anti-interference protection systems, e.g. RC-type.

– In the case of magnetically induced interference the use of twisted couples of signal cables (so-called “spirals”) is recommended.

Connections of measurement signal and relay output should be made by screw connectors mounted inside the housing.

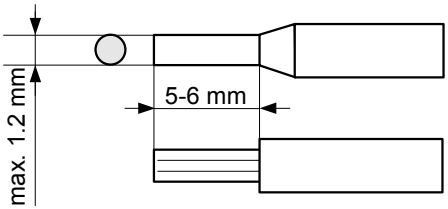

Figure 4.2. Method of cable insulation replacing and cable terminals

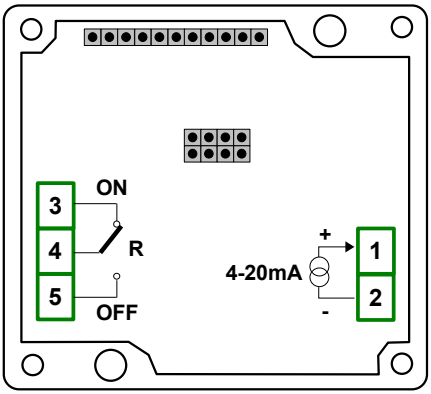

Figure 4.3. Terminals description

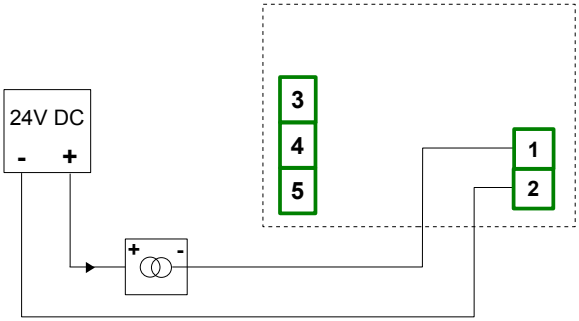

Figure 4.4. Connection of 2-wire current converters

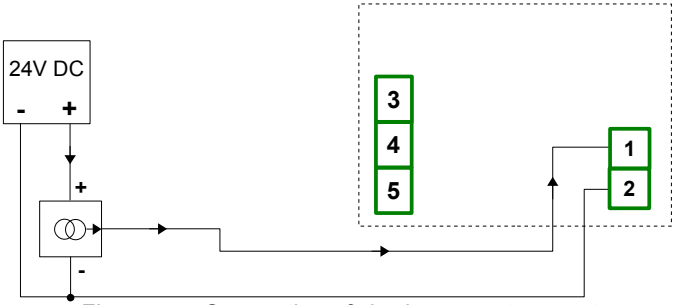

Figure 4.5. Connection of 3-wire current converters

4.4. MAINTENANCE

The unit does not have any internal replaceable or adjustable components available to the user. Pay attention to the ambient temperature in the room where the unit is operating. Excessively high temperatures cause faster ageing of the internal components and shorten the fault-free time of unit operation.

In cases where the unit gets dirty do not clean with solvents. For cleaning use warm water with small amount of detergent or in the case of more significant contamination ethyl or isopropyl alcohol.

Using any other agents can cause permanent damage to the housing.

Product marked with this symbol should not be placed in municipal waste. Please check local regulations for disposal and electronic products.

5. DESCRIPTION OF THE FRONT PANEL AND IR REMOTE CONTROLLER PUSH-BUTTONS

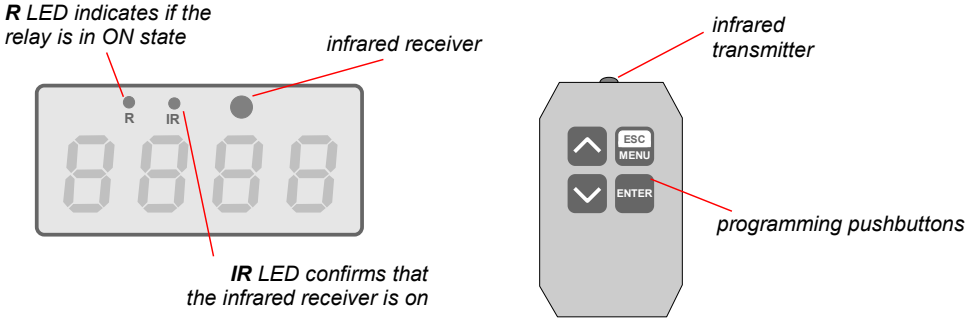

Symbols and functions of push-buttons:

ESC MENU

Symbol used in the manual: **[ESC/MENU]**
Functions:
- Enter to main menu (press and hold by at least 2 sec.)
- Exit the current level and Enter to previous menu (or measure mode)
- Cancel the changes made in parameter being edited

ENTER

Symbol used in the manual: **[ENTER]**
Functions:
- Start to edit the parameter
- Enter to the sub-menu,
- Confirmation of changes made in parameter being edited

Symbol used in the manual: **[^] [v]**
Functions:
- Change of the present menu,
- Modification of the parameter value,
- Change of the display mode.

6. PRINCIPLE OF OPERATION

Device is supplied from current loop. For proper work of device it is required to guarantee that signal value of current loop is greater than 3.5 mA. If signal value is too low then running decimal point is displayed. Device configuration using remote controller is possible if signal value of current loop is greater than 10 mA (it is signalised by front panel LED marked **"IR"**).

6.1. MEASUREMENT MODE

In the measure mode, the measurement results, converted over selected characteristic, are displayed on the LED display. The measurement range equal to the nominal range is called: ***nominal measurement range,*** and the measurement range equal to the extended nominal range is called: ***permissible measurement range*** (figure 6.1).

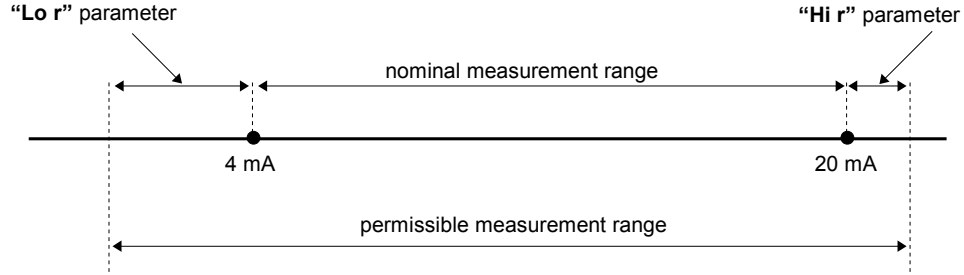

Figure 6.1. Definitions of measurement ranges in mode 4 ÷ 20mA

If the result of measurement exceeds the ***permissible measurement range***, warning **"-Hi-"** or **"-Lo-"** is displayed rather than input signal, depends on exceeded value (see description of **"Lo r"** i **"Hi r"** parameters, paragraph ***"inPt" menu***).

If the measurement value do not exceeds ***permissible measurement range***, but displayed value exceeds range -999 ÷ 9999, the warning **"-Ov-"** is displayed rather than the calculated result.

Range of displaying values, characteristic of conversion, decimal point position and measure filtering ratio, are user configurable parameters. All accessible parameters can be changed by entering the menu (see: ***DEVICE PROGRAMMING***). Use the remote controller to do it.

Configuration of the device via menu **do not stops measures**.

6.2. DETECTION OF THE PEAK VALUES

The **SWE-N55L** controller is equipped with peaks detection function. It can detect a peaks of the input signal and display their values. Presets connected with this function are placed in **"HOLd"** menu (see description of ***"HOLd" menu***). The detection of the peak can be done if the measured signal raises and drops of value at least equal to parameter **"PEA"**. Detected peaks are displayed during the time defined by parameter **"timE"**. If a new peak will be detected while one is displayed, this new peak will be displayed and display time counter will be cleared (figure 6.2). If no peaks are detected while time **"timE"** elapses**,** device starts to show the current value of input signal again.

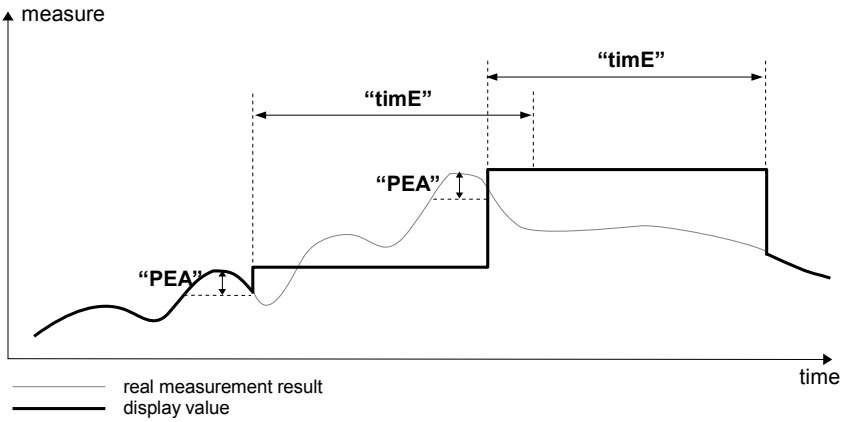

Figure 6.2. Process of peaks detection

6.3. CONTROL OF THE RELAY OUTPUT

Device is equipped with one bistable SPDT relay output. Front panel LED named **"R"** indicates the state of the relay output.

After device power on relay is in the same state as it was set while power off (see parameter **"AL"** of **"rEL"** menu description). There is **no possibility** to change relay state **until** 10 seconds elapsed since device power on. During this period it is required to power device by at least 3.5 mA current. Otherwise the waiting time is extended by the time of waiting for the correct current. Each next change of the relay state is possible after at least 4 seconds since last change of the relay state. This delay is also extended by the time of waiting for the correct current (minimum 3.5 mA). During device power off the relay is set according to the value of "**AL"** parameter.

Modes of the control can be changed depend on the values of parameters **"SEtP"**, **"SEt2", "HYSt"**, **"modE"** and **"AL".** Depend on **"modE"** parameter, relay can be used or controlled over one or two thresholds values.

If one threshold is used (figure 6.4) the relay can be turned on (**"modE"** = **"on"**) or off (**"modE"** = **"oFF"**) when the input signal value enters the ***zone A.*** If two thresholds are used (figure 6.5) the relay will be turned on when value of input signal enters the ***zone A*** (**"modE"** = **"in"**) or ***zone B*** (**"modE"** = **"out"**) and turned off if the signal enters the second one.

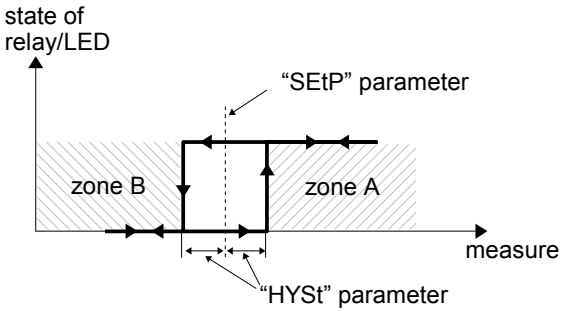

Figure 6.3. One threshold control of the relay/LED outputs

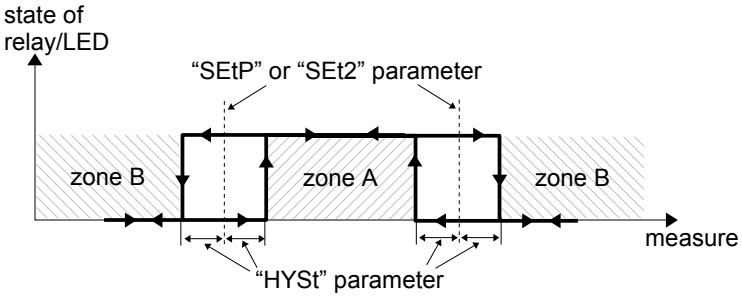

Figure 6.4. Two threshold control of the relay/LED outputs

The relay output and LED (named **“R”**) can be controlled depend on both - the current value and the peak value (when peak detection is active) of the input signal.

6.3.1. One threshold mode

Figure 6.5 presents the principle of relay output operation for one threshold mode and an example values of other parameters.

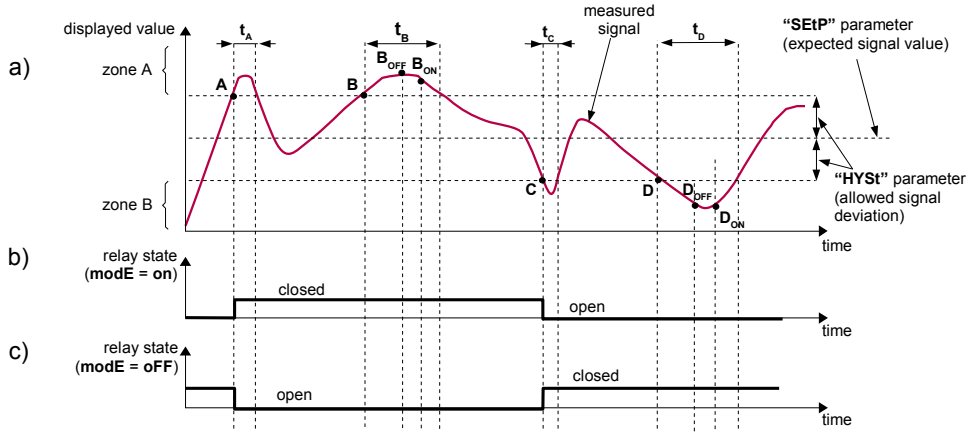

Description:
A, B, C, D - points where measured signal exceeds border values (expected value ± allowed deviation)
tA , tB , tC , tD - time periods while input signal is in zone A or zone B

Figure 6.5. Principle of LED/relay output operation for one threshold mode

Parameter **"SEtP"** sets a **threshold** of the relay, and parameter **"HYSt"** sets a **hysteresis** of the relay (figure 6.5 a). The relay can change his state **only** when input value exceeds (over or under) ***border value***. ***Border values*** means values equal ***threshold+hysteresis*** and ***threshold-hysteresis*** respectively.

The relay state will be changed **as soon** as input value exceeds any of the ***border values*** (see points A and C, figure 6.5 a, b, c) **but only if at least 4 seconds elapsed** since last change of the relay state. In the other case relay state will be changed after required delay (4 sec) if the condition of changing the relay still is fulfilled.

The state of relay output while the input value exceeds the ***border values*** (points A, B, C, D) is described by parameter **"modE".** The relay can be turned on (**"modE" = "on"**), or turned off (**"modE" = "oFF"**) when input signal value enters the ***zone A*** (figure 6.6 a).

The parameter **"AL"** allow user to set the relay output behaviour in critical situations (e.g. input values exceeds ***permissible measurement range***). User can select that the relay will be turned on, turned off or not changed in critical situations.

All parameters connected with relay outputs are described in paragraph ***"rEL" menu***.

6.3.2. Two thresholds mode

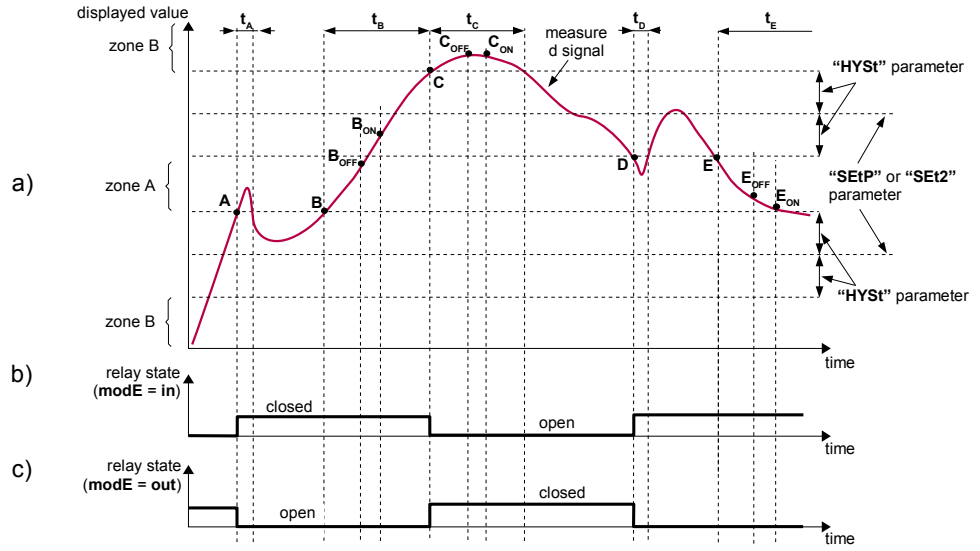

Description:
A, B, C, D, E - points where measured signal exceeds border values (expected value ± allowed deviation)
t_A , t_B , t_C , t_D , t_E - time periods while input signal is in zone A or zone B

Figure 6.6. Principle of LED/relay output operation for two thresholds mode

Figure 6.6 presents the principle of relay outputs operation for two thresholds mode, and an example values of other parameters. In this mode parameter **"SEt2"** is accessible in common with **"SEtP"**, this parameter describes a second threshold of the relay output. The parameters **"HYSt"**, **"modE"** and **"AL"** are connected with both **"SEtP"** and **"SEt2"** thresholds. While the controlling process, the relay output changes his state depends of both **"SEtP"** and **"SEt2"** thresholds in similar way as it was described in one threshold mode.

If two threshold mode is used, **"modE"** parameter defines state of the relay output when the input value occurs in a particular zone defined by ***border values*** of both **thresholds**. The relay can be turned on if the input value enters the ***zone A*** (**"modE" = "in"**) or ***zone B*** (**"modE" = "out"**) and turned off if it enters the second one (figure 7.1).

The sequence of thresholds **"SEtP"** and **"SEt2"** can be set in any order, due to the control of relay output is done depend on difference between thresholds values (**zone A**) and outside of thresholds values (**zone B**).

7. DEVICE PROGRAMMING

The device menu allow user to set all parameters connected to operation of measurement input, control modes, critical situations behaviour and access settings. The meaning of the particular parameters is described in paragraph ***MENU DESCRIPTION***.

The device can be configured via IR remote controller but it must be supplied at least by **10mA** current and the temperature must be at least **0°C** in order to do that.

7.1. PROGRAMMING MENU

To enter main menu (being in the measurement mode) operator must to press and hold at least 2 sec. **[ESC/MENU]** button.

If the user password is defined (see parameter **"Scod"**), operator have to enter correct one before proceeding to menu options . Entering of the passwords is similar to the edition of numeric parameters (see: ***PARAMETERS EDITION***), however presently editing digit is showed only on the display, other digits are replaced by "-" sign.

After entering of last digit of the password first menu position will be displayed (if the password is correct) or warning **"Err"** in other case.

Functions of the buttons while sub-menu and parameters choice:



Selection of sub-menu or parameter for editing. Name of selected item (sub-menu or parameter) is displayed.



Operation of **[ENTER]** button depend on present menu position:

- if the name of some sub-menu is displayed - enter this sub-menu; name of the first parameter (or next level sub-menu) is displayed,
- if the name of some parameter is displayed - enter the edition of this parameter; present value of the parameter is displayed,



[ESC/MENU] button allow user to exit present menu level and goes to upper level menu (or measurement mode).

After about 1 min. since last use of the buttons, device exits the menu mode and returns to the measurement mode (only if no parameters are in editing mode).

7.2. PARAMETERS EDITION

To start edition of any parameter user should select name of desired one using **[^] [v]** buttons and then press **[ENTER]**.

7.2.1. Numeric parameters (digit change mode)

Numerical parameters are displayed as decimal numbers. The mode of its new value entering depends on chosen edit method (see parameter **"Edit"**).

In mode "by digit" (**"Edit"="dig"**) pressing one of the keys **[^]** or **[v]** causes change of current position (flashing digit) or the sign (+/-). Short pressing of the **[ENTER]** button causes change of the position (digit).

Press **[ENTER]** at least 2 seconds to accept the changes, after that question **"SEt?"** is displayed, and user must to confirm (or cancel) the changes. To conform changes (and story it in EEPROM) press **[ENTER]** button shortly after **"SEt?"** is displayed. To cancel the changes press **[ESC]** button shortly after **"SEt?"** is displayed. After that device returns to the menu.

7.2.2. Switch parameters ("LIST" type)

Switch parameters can be described as a sets of values (a lists) out of which only one of the options available on the list can be selected for the given parameter. Options of switching parameter are selected using **[^]**, **[v]** keys.

Short pressing of **[ENTER]** causes in displaying of the acknowledge question (**"SEt?"**). If key **[ENTER]** is pressed again, the changes are accepted, stored in EEPROM end the edition process finished. Pressing the key **[ESC]** after **"SEt?"** causes in cancelling of made changes and returning to menu.

Functions of buttons when editing numeric and switching parameters:



While editing numeric parameter - change of current (flashing) digit.
While editing switch parameter - selection of switch parameter.



If numerical parameter is being edited, a short press of **[ENTER]** button change edited position. A long press of **[ENTER]** button (at lest 2 sec.) causes of display a **"SEt?"** ask, which allow user to make sure if change of the parameter value is correct. If switch parameter is being edited, a short press of **[ENTER]** button causes of display a **"SEt?"** ask. When **[ENTER]** button is pressed again (while **"SEt?"** is displayed) the new value of the parameter is stored in EEPROM memory.



Pressing this button operator can cancel the changes done up to now (if they were not approved by **[ENTER]** button after the **"SEt?"** ask) and come back to menu

7.3. MENU DESCRIPTION

"- - - -" - password checking. If some password different from **"0000"** is set, then every enter to main menu follows the entering of password. If entered password is correct then first menu position will be displayed else warning **"Err"**, and unit returns to measurement mode.

Due to problem with direct displaying of "m" letter, it is exchanged with special sign **" n̄ "**. Independently in user manual letter "m" is used to make it more readable (example: **"modE"**).

7.3.1. "rEL" menu

This menu allows to configure the operation mode of relay and LED marked **"R"**.

Principle of the relay operation is described in paragraph ***CONTROL OF THE RELAY OUTPUT***.

The relay output and LED (named **R**) can be controlled depend on both - the current value and the peak value (when peak detection is active) of the input signal.

"SEtP" - first threshold of the relay (range -999 ÷ 9999). Negative values can be input by selecting a "-" sign on first digit (to change value use **[^]** and **[v]** buttons). **Threshold is the medium value of relay hysteresis.**

"SEt2" - second threshold of the relay (range -999 ÷ 9999). Negative values can be input by selecting a "-" sign on first digit (to change value use **[^]** and **[v]** buttons). This threshold is accessible when "**modE"** parameter is set to **"in"** or **"out"** value. **Threshold is the medium value of relay hysteresis.**

"HYSt" - hysteresis of relay (range 0 ÷ 999). Full hysteresis of the relay is equal to 2x **"HYSt"** parameter. The relay state can change when an input signal is out of **threshold-hysteresis** to **threshold+hysteresis** zone.

Presented parameters should be set to ensure that **"SEtP" + "HYSt", "SEt2" + "HYSt", "SEtP" - "HYSt"** or **"SEt2" - "HYSt"** do not exceeds the measure range. Additionally, in two threshold mode (**"modE" = "in"** or **"out"**), the hysteresis for both thresholds must not cover each other (in other case relay can't change its state).

"modE" - relay operation mode:

"noAc" - the relay is not active (doesn't change state)

"on" - one threshold mode, the relay turns **ON** when input signal exceeds from the bottom **SEtP+HYSt** value**,** and turns **OFF** when exceeds from the top **SEtP-HYSt**,

"oFF" - one threshold mode, the relay turns **ON** when input signal exceeds from the top **SEtP-HYSt** value**,** and turns **OFF** when exceeds from the bottom **SEtP+HYSt**,

"in" - two threshold mode, the relay turns **ON** when the input signal exceeds from the bottom **"*lower threshold* + HYSt"** or from the top **"*bigger threshold* - HYSt"**, and turns **OFF** when exceeds from the top **"*lower threshold* - HYSt"** or from the bottom **"*bigger threshold* + HYSt"**. The ***bigger threshold*** means bigger one of **"SEtP"** and **"SEt2"** thresholds, the ***lower threshold*** means lower one of **"SEtP"** and **"SEt2"** thresholds.

"out" - two threshold mode, the relay turns **ON** when the input signal exceeds from the top **"*lower threshold* - HYSt"** or from the bottom **"*bigger threshold* + HYSt"**, and turns **OFF** when exceeds from the bottom **"*lower threshold* + HYSt"** or from the top **"*bigger threshold* - HYSt"**. The ***bigger threshold*** means bigger one of **"SEtP"** and **"SEt2"** thresholds, the ***lower threshold*** means lower one of **"SEtP"** and **"SEt2"** thresholds.

- **LED lights when "ON" part of the relay is closed**, independently of relay's mode.
- When power supply fail, unit sets relay state accordingly to **"AL"** parameter.

"AL" - this parameter defines the relay reaction when some critical situations occurs:

"noCH" - relay do not change his state,
"on" - relay will be turned **ON**,
"oFF" - relay will be turned **OFF**.

If parameter **"modE"** is set to **"on"** , **"oFF"**, **"in"** or **"Out"** the "critical situation" means that allowable measurement range is exceeded.

- If option **"noCH"** is selected for **"AL"** parameter, behaviour of the relay may depend on **"FiLt"** parameter in some cases. If **"FiLt"** is set to big value and the input signal drops, result value of the measure will change slow, causes of turning on or off relay due to thresholds values. The critical situation is slowly detected, so it is impossible to predict the relay state in that situations.
- If parameter **"AL"** = **"on"**, the relay will be turned on in the critical situations, even if his parameter ***"modE"*** = ***"noAC".***

7.3.2. "inPt" menu

This menu presets the measurement input:

"CHAr" - this option presets type of the conversion characteristic, and can be set to:

"Lin" - linear
"Sqr" - square
"Sqrt" - square root

} When one of those characteristics is chosen display range is defined by **"Lo C"** and **"Hi C"**.

"USEr" - user defined characteristic. Maximal length 20 points. Every point is defined by user. Adding, Editing and Deleting of points is done by options **"AddP"**, **"EdtP"**, **"dELP"** (**"InPt"** menu) respectively.

If user defined characteristic is selected, and if number of defined points is lower than 2 then warning **"Errc"** is displayed in measurement mode.

The process of displayed result calculation is described in details in ***DISPLAY VALUES CALCULATION*** paragraph.

"FiLt" - this parameter sets filtration rate. It can be set to values from 0 (no filtration) to 5 (strongest filtration – time window about 3 sec).

"Pnt" - decimal point position. It can be set to one of:
" 0", " 0.0", " 0.00", "0.000"
Decimal point position is changed by **[^]**, **[v]** buttons.

"Lo C"
"Hi C" These parameters describe the values displayed for minimum and maximum input current. **"Lo C"** parameter defines the value displayed when input current is equal 4 mA, and **"Hi C"** parameter defines the value displayed for 20 mA of input current. Available range for these parameters: -999 ÷ 9999. Negative values can be set by entering **'-'** sign on the first position (by use of **[^]**, **[v]** buttons).

If user defined characteristic is selected (parameter **"CHAr"** = **"USEr"**) the parameters **"Lo C"** and **"Hi C"** are not available for modification, due to their values are calculated from defined characteristic.

"AddP" - this menu allow user to add single point to the user defined characteristic. After selection of this option device waits for **"X"** and **"Y"** coordinates of new point. Modification of the coordinates is done accordingly to numerical parameters edition. Coordinate **"X"** defines the percentage ratio of input current to selected current range. The **"X"** range: -99,9 ÷ 199,9. Coordinate **"Y"** defines displayed value for particular **"X"** value. The **"Y"** value can be changed in range: -999 ÷ 9999, decimal point position depend on **"Pnt"** parameter (menu **"inPt"**).

- User can not enter two points with the same value of **"X"** coordinate. If user trays to do it, **"Err"** warning is displayed. To modify any defined point use **"EdtP"** option.
- To distinguish **"X"** and **"Y"** coordinates, if **"X"** coordinate is displayed an additional decimal point on utmost right position is displayed.
- If user defined characteristic is selected, and if number of defined points is lower than 2 then warning **"Errc"** is displayed in measurement mode.

"dELP" - this option allows user to delete any of the points of the user defined characteristic. After selection current number of points of the user defined characteristic is displayed for about approx. 1.5 sec. After that device waits for selection of point being deleted (by **[^]**, **[v]** buttons). The short pressing of **[ENTER]** button causes by switching between **X** and **Y** value of the displayed point. The long press (press and hold at least 2 sec) of **[ENTER]** button causes by displaying **"dEL?"** ask. If **[ENTER]** button is pressed again, current point is deleted and new updated number of points of the user defined characteristic is displayed.

"EdtP" - this option allows user to modify of particular point of the user defined characteristic. After selection current number of points of the user defined characteristic is displayed for about approx. 1.5 sec. After that device waits for selection of point being edited (by **[^]**, **[v]** buttons). The short pressing of **[ENTER]** button causes by switching between **X** and **Y** value of the displayed point. The long press (press and hold at least 2 sec) of **[ENTER]** button causes by entering to edit the selected coordinate of the point. Modification of the coordinates is done accordingly to numerical parameters edition.

"AddP", **"dELP"** and **"EdtP"** options are available only if the user defined characteristic is used (it means when parameter **"CHAr"** = **"USEr"**).

"Lo r", **"Hi r"** - these parameters define the expansion of nominal range in percent. They determine the permissible range of input signal (figure 7.1).

The permissible range allow user to exceed the ***nominal range*** of input signal. If input value is contained in the permissible range a proper result is displayed. If input signal exceeds this range (defined by **"Lo r"** and **"Hi r"**), **"-Lo-"** or **"-Hi-"** warning is displayed depend on input signal value.

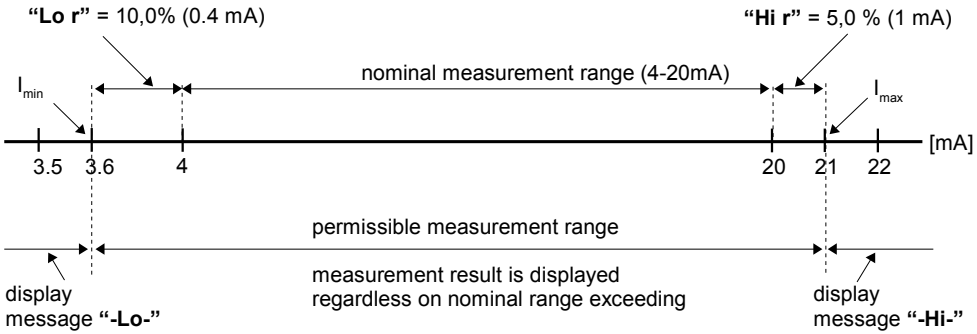

Figure 7.1 Example of definition of permissible range of input signal -
"Lo r" and "Hi r" parameters

The **"Lo r"** parameter determines lower border of the permissible range calculated due to expression: I_{min} = 4 mA - 4 mA × **"Lo r"** %.
The **"Lo r"** value can be set from 0 to 12.4%.
Parameter **"Hi r"** determines the upper border of the permissible range accordingly to the expression: I_{max} = 20 mA + 20 mA × **"Hi r"** %.
The value of **"Hi r"** can be set from 0 to 19.9%

In example no 1 of the ***DISPLAY VALUES CALCULATION*** paragraph the procedure of the permissible input range determining is presented in details.

If the measurement value do not exceeds ***permissible measurement range*** but displayed value exceeds range -999 ÷ 9999, the warning **"-Ov-"** is displayed rather than the calculated result.

7.3.3. "HOLd" menu

This menu contains parameters connected with peak detection function. See also full description of the peak detection function in paragraph: ***DETECTION OF THE PEAK VALUES***

"modE" - the type of detected changes of the input signal, can be set to values:

"norm" - peaks - peak and next drop of the input signal of value equal at least **"PEA"**,
"inv" - drops - drop and next peak of the input signal of value equal at least **"PEA"**,

"PEA" - minimal detected signal change classified as peak or drop (see Figure 6.2)

"timE" - maximum time of displaying of the peak (drop) value, can be set from 0.0 to 19.9 sec, with 0.1 sec. resolution.

"HdiS" - type of displayed values:

"rEAL" - current value is displayed,
"HOLd" - peak (drop) value is displayed,

“H r1” - relay/LED output R operation mode:

“rEAL” - relay/LED operates depend on the current value,
“HOLd” - relay/LED operates depend on the peak (drop) value.

7.3.4. “Scod” parameter

This parameter defines user password (4-digits number). If this parameter is set at value **“0000”**, user password is turned off.

If the user do not remember his password, the access to the menu is possible by the “one-use password”. To get this password please contact with Marketing Division. “Single use password” can be used only one time, after that it is destroyed. Entering this password causes in clearing of user password, it means sets the user password to “0000”.

The “one-use password” can be used **ONE TIME ONLY**, it is impossible to use it again! The “one-use password” can be restored by Service Division only.

7.3.5. “dEFS” parameter

This setting allows to restore the factory settings of the device. To get the access to this option special password is required: “5465”, next the device displays acknowledge question **“SEt?”**. Press **[ENTER]** to acknowledge the restoring of factory settings or **[ESC]** to cancel.

7.3.6. “SErv” menu

This menu contains the parameters for authorized service only. To enter this menu proper service password must be entered. Improper settings can causes of damage of the device.

7.4. MENU STRUCTURE

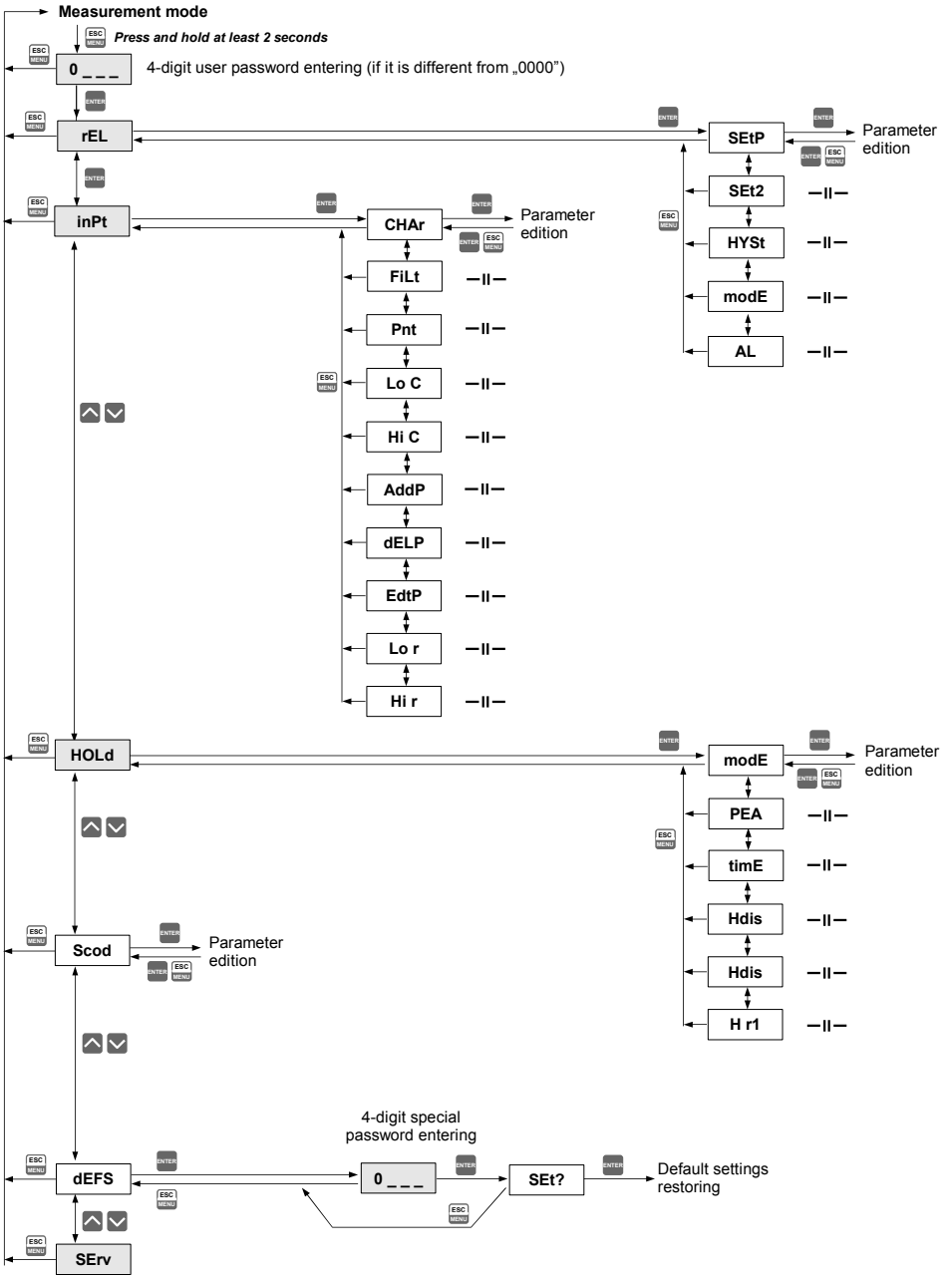

8. OVER-CURRENT PROTECTION

The current input of the device is equipped with over-current protection circuit. This circuit protects the standard resistor to damage. Maximum input current is set to about 50 mA.
When temperature of the standard resistor falls, the protection circuit will turn off himself automatically, and the device will measure the input current again. Due to thermal phenomenon in the standard resistor, precision of the measurement may be lower, during few minutes (up to the standard resistor temperature will falls to the environment temperature).

9. DISPLAYED VALUES CALCULATION

The first step to compute the result of measure is the calculation of the normalized result (it means result of 0-1 range). To do it, the begin of the input range (4mA for 4-20mA range) must be subtracted from measured value. Next, received result must be divided by the width of the input range (it means 16mA for 4-20mA range). So normalized result can be expressed by expressions:

$$I_n = \frac{I_{inp.} - 4}{16} \qquad for \quad 4 \div 20\,mA \quad range$$

where $I_{inp.}$ Means input current (in mA), and I_n – normalized result.

If measured value exceeds the nominal input range (4-20mA), and do not exceed the permissible input range, then received normalized I_n result will exceed 0-1 range, e.g. input range 4-20 mA, input current = 3 mA – the normalized result is equal -0,0625, and for input current = 22 mA, the normalized result is equal 1,125. In such cases presented expressions are still correct.

9.1. ADDITIONAL CALCULATIONS (USED CONVERSION CHARACTERISTIC)

The manner of the additional computation of the displayed result depends on selected conversion characteristic. All presented charts are connected with the input range 4 - 20 mA.

9.1.1. Linear characteristic

The normalized result is converted by fixed coefficients determined by **"Lo C"** and **"Hi C"** parameters (when the normalized results is equal 0, then value **"Lo C"** is displayed, and when the normalized results is equal 1, then value **"Hi C"** is displayed). Expression presented below shows the manner of result calculation:

$$W = I_n \times ("Hi\ C" - "Lo\ C") + "Lo\ C",$$

where **W** means the displayed value.

The value of the **"Lo C"** parameter can be higher than the value of **"Hi C"** parameter. In such a case, for an increasing value of input current the displayed value decreases.

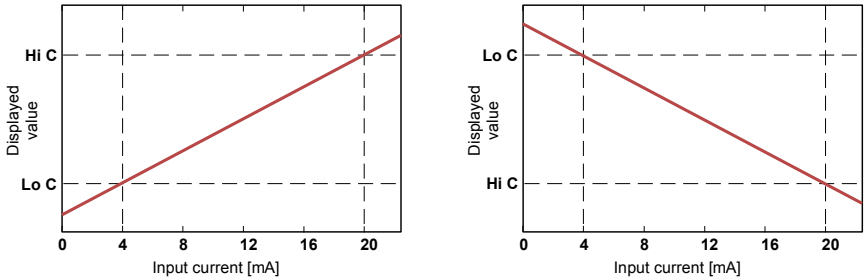

Figure. 9.1 Normal ("Lo C" < "Hi C") and inverted ("Lo C" > "Hi C") characteristic

9.1.2. Square characteristic

The normalized result is squared and further conversion is done as for linear characteristic. Conversion is made accordingly with the expression:

$$W = I_n^2 \times ("Hi\ C" - "Lo\ C") + "Lo\ C",$$

where **W** means the displayed value.

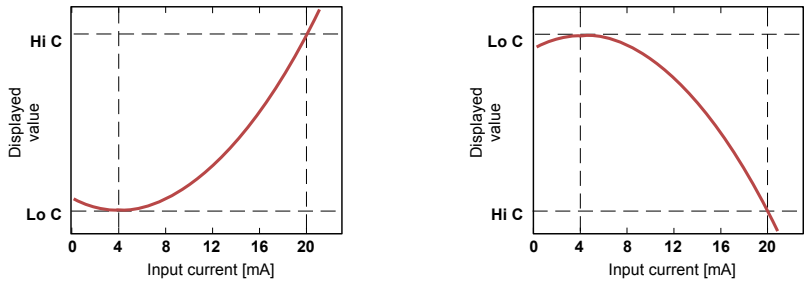

Figure. 9.2 Normal ("Lo C" < "Hi C") and inverted ("Lo C" > "Hi C") characteristic

9.1.3. Square root characteristic

The normalized result is rooted and further conversion is done as for linear characteristic. Conversion is made accordingly with the expression:

$$W = \sqrt{I_n} \times ("Hi\ C" - "Lo\ C") + "Lo\ C",$$

where W means the displayed value.

Showed above expression is not valid when normalized result is negative. It is possible for 4-20 mode only. In this case (I_n<0) the displayed result is equal **"Lo C"** (see graphs below).

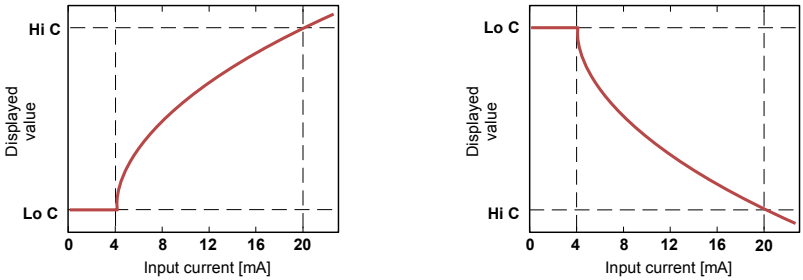

Figure. 9.3 Normal ("Lo C" < "Hi C") and inverted ("Lo C" > "Hi C") characteristic

9.1.4. User defined characteristic

User defined characteristic is defined as set of X-Y points. Number of the points is variable and may be set from 2 to 20 points which make linear segments (see graph and see ***Menu "inPt"***). Due to the normalized result I_n , the device computes specific segment, e.g. for characteristic from figure below, and I_n = 0,65 the segment between points X = **"50.0."** and X = **"70.0."** will be chosen.
Let's mark those points as PL (point low) i PH (point high) - in this example PL= **"50.0,"** and PH = **"70.0."**, and the normalized result I_n for the point PL as I_p (in this example I_p = I_n(PL) = 0,5). The displayed result is calculated accordingly to the expression:

$$W = (I_n - I_p) \times \frac{[Y(PH) - Y(PL)]}{[X(PH) - X(PL)]} \times 100 + Y(PL)$$

where Y(PH), X(PH), Y(PL), X(PL) mean values of X and Y coordinates of PH i PL points.

If the normalized result exceeds the user defined characteristic values, then specific utmost segment, defined by two next points, is used for calculations. If characteristic from figure below is used, and if I_n>1 then segment defined by points X(PL) = **"90.0."**, X(PH) = **"100.0."** will be used.

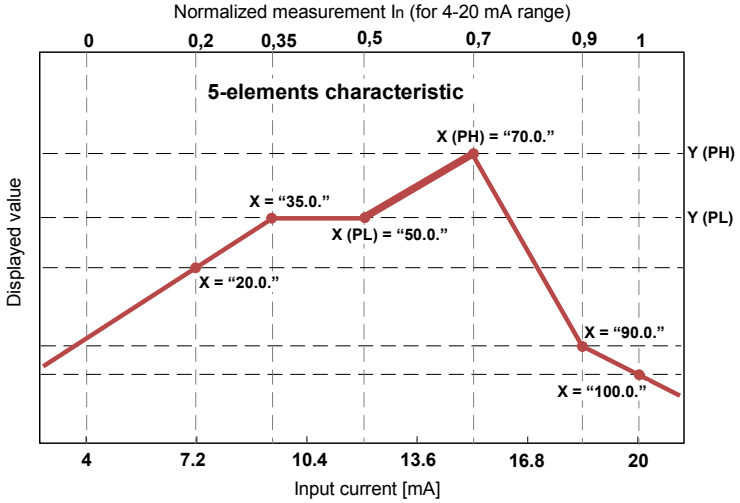

Figure. 9.4 Example of user defined characteristic

9.2. EXAMPLES OF CALCULATIONS

Example 1: ***Selection of the permissible input range ("4-20" mode)***

If the user sets **"Lo r"** = 20,0% and **"Hi r"** = 10,0%, then permissible input currents range will be equal: 3,2 mA ÷ 22 mA. Lower border of the range is the result of calculations: 4 mA - 4 mA × 20%, and the higher : 20 mA + 20 mA × 10%.

Example 2: ***The normalized I_n result calculation***

The normalized I_n result is calculated accordingly to the expression on page 23, so if I_{in} = 10 mA then 10 mA - 4 mA = 6 mA, and this result should be divided by the width of input range (16 mA). Finally the normalized result: I_n = 6/16 = 0,375.

In case when input current exceeds nominal measurement range, calculations are similar. For example if input current is equal 2,5 mA then I_n = (2,5 - 4)/16 ≅ -0,0938, and if input current is equal 20,5 mA then I_n = (20,5 - 4)/16 ≅ 1,0313.

Example 3: ***The linear characteristic***

Let parameters **"Lo C"** and **"Hi C"** equal to -300 and 1200 respectively. The calculations will be done for three different input currents from example 2.

a) I_{in} =10 mA and I_n = 0,375
Accordingly to expression on page 24 for linear characteristic:
0,375 × [1200 -(- 300)] ≅ 562 and next, the **"Lo C"** value is added to the result , so the displayed value:
W ≅ 562 + (-300) = 262

b) I_{in} = 2,5 mA and I_n = -0,0938.
W ≅ -441.

c) I_{in} = 20,5 mA and I_n = 1,0313.
W ≅ 1247.

***Example 4:* The square characteristic**

Let parameters **"Lo C"** and **"Hi C"** equal to -300 and 1200 respectively. The calculations will be done for there different input currents from example 2.

a) I_{in} =10 mA and I_n = 0,375
Accordingly to expression on page 24 for square characteristic: $(0,375)^2$ × [1200 -(- 300)] ≅ 211.
and next, the **"Lo C"** value is added to the result , so the displayed value:
W ≅ 211 + (-300) = -89

b) I_{in} = 2,5 mA and I_n = -0,0938.
W ≅ -287.

c) I_{in} = 20,5 mA and I_n = 1,0313.
W ≅ 1295.

***Example 5:* The square root characteristic**

Let parameters **"Lo C"** and **"Hi C"** equal to -300 and 1200 respectively. The calculations will be done for there different input currents from example 2.

a) I_{in} =10 mA and I_n = 0,375
Accordingly to expression on page 25 for square root characteristic:
$\sqrt{0,375}$ × [1200 -(- 300)] ≅ 919.
and next, the **"Lo C"** value is added to the result , so the displayed value:
W ≅ 919 + (-300) = 619

b) I_{in} = 2,5 mA and I_n = -0,0938 , normalized result is negative , so the displayed value is equal to **"Lo C"** parameter: W ≅ **"Lo C"** = -300.

c) I_{in} = 20,5 mA and I_n = 1,0313.
W ≅ 1223.

***Example 6:* The user defined characteristic**

Let the user selected the 10 segment characteristic. To do this it is necessary to enter X and Y coordinates of 11 points (see ***Menu "inPt"***).
The calculations will be done for three different input currents from example 2, so in calculations some of the segments will be used only.

Let the following points will be given:
X1 = **"00.0."**, Y1 = **"-50.0"**,
X2= **"10.0."**, Y2 = **"-30.0"**,
....
X6 = **"30.0."**, Y6 = **"30.0"**,
X7 = **"40.0."**, Y7 = **"80.0"**,
....
X10 = **"90.0."**, Y10 = **"900.0"**,
X11 = **"100.0."**, Y11 = **"820.0"**,

Additionally all other points must to be defined and stored in the device memory.

a) I_{in} =10 mA and I_n = 0,375

The segment defined by X6 = **"30.0."** and X7 = **"40.0."** for this I_n will be selected. Accordingly to expressions given for user defined characteristic (see page 25) X6(PL) = 30, Y6(PL) = 30, X7(PH) = 40**,** Y7(PH) = 80 and I_p = 0,3 , the displayed value :

$$W = (I_n - I_p) \times \frac{[Y(PH) - Y(PL)]}{[X(PH) - X(PL)]} \times 100 + Y(PL) =$$

$$= (0{,}375 - 0{,}3) \times \frac{[80 - 30]}{[40 - 30]} \times 100 + 30 \simeq 67$$

b) I_{in} = 2,5 mA and I_n = -0,0938, because of the normalized I_n value is lower than 0, the segment defined by X1 and X2 will be selected. X1(PL) = 0, Y1(PL) = -50, X2(PH) = 10**,** Y2(PH) = -30 and I_p = 0. For these values the displayed value W ≅ -69.

c) I_{in} = 20,5 mA and I_n = 1,0313., because of the normalized I_n value is higher than 1, the segment defined by X10 and X11 will be selected, and X10(PL) = 90, Y10(PL) = 900, X11(PH) = 100**,** Y11(PH) = 820 and I_p = 0,9 for these values the displayed value W ≅ 795.

10. DEFAULT AND USER'S SETTINGS LIST

Parameter	*Description*	*Default value*	*User's value*	*Desc. page*
Parameters of relay R1 operation ("rEL1" menu)				
SEtP	Relay R1 threshold	20.0		16
SEt2	Relay R1 second threshold	30.0		17
HYSt	Hysteresis of relay R1	0.0		17
modE	Operation mode of relay R1	in		17
AL	Reaction for critical situation of relay R1	oFF		18
Configuration of measurement input ("inPt" menu)				
CHAr	Conversion characteristic mode	Lin		18
FiLt	Filtering ratio	0		18
Pnt	Decimal point position	0.0		18
Lo C	Minimum displayed value (for nominal range)	000.0		18
Hi C	Maximum displayed value (for nominal range)	100.0		18
Lo r	Extension of the bottom of the nominal input range	5.0 (%)		19
Hi r	Extension of the top of the nominal input range	5.0 (%)		19
Configuration of peaks detection function ("HOLd" menu)				
modE	Kind of detected changes	norm		20
PEA	Minimum detected change	0.0		20
timE	Maximum time of peak displaying	0.0		20
HdiS	The type of displayed value	HOLd		20
H r1	Source of relay R, and LED R control	rEAL		21

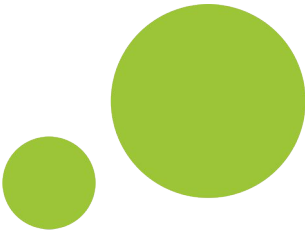

SIMEX Sp. z o.o.
ul. Wielopole 7
80-556 Gdańsk
Poland

tel.: (+48 58) 762-07-77
fax: (+48 58) 762-07-70

http://www.simex.pl
e-mail: info@simex.pl