Time Electronics
Calibration, Test and Measurement

User Manual

7007 Loop-Mate 2
Loop Signal Indicator

Version 1.1
August 2021

Time Electronics Ltd
Unit 5, TON Business Park, 2-8 Morley Road,
Tonbridge, Kent, TN9 1RA, United Kingdom.

T: +44 (0) 1732 355993 | F: +44 (0) 1732 350198
mail@timeelectronics.co.uk | www.timeelectronics.com

© 2021 Time Electronics Ltd.

All rights reserved.
Nothing from this manual may be multiplied, or made public in any form or manner, either electronically or hard copy, without prior written consent from Time Electronics Ltd.
This also applies to any schematics, drawings and diagrams contained herein.

This manual provides operating and safety instructions for the Time Electronics product. To ensure correct operation and safety, please follow the instructions in this manual.

Time Electronics reserves the right to change the contents, specifications and other information contained in this manual without notice.

Contents

1 Introduction 4

1.1 Features 4
1.2 Description 5
1.3 Specifications 6

2 Front panel controls 7

3 Operation 8

3.1 Function Select 8
3.2 Display Select 8
3.3 Description of typical process loop components 8
3.4 Rx Sim function 10
3.5 Tx Test function 11
3.6 Meas Volt DC function 12

4 Power supply 13

4.1 Battery life 13
4.2 Battery replacement 13

5 Maintenance 14

5.1 Calibration 14
5.2 Adjustment of Calibration 18

6 Warranty and Servicing 24

1 Introduction

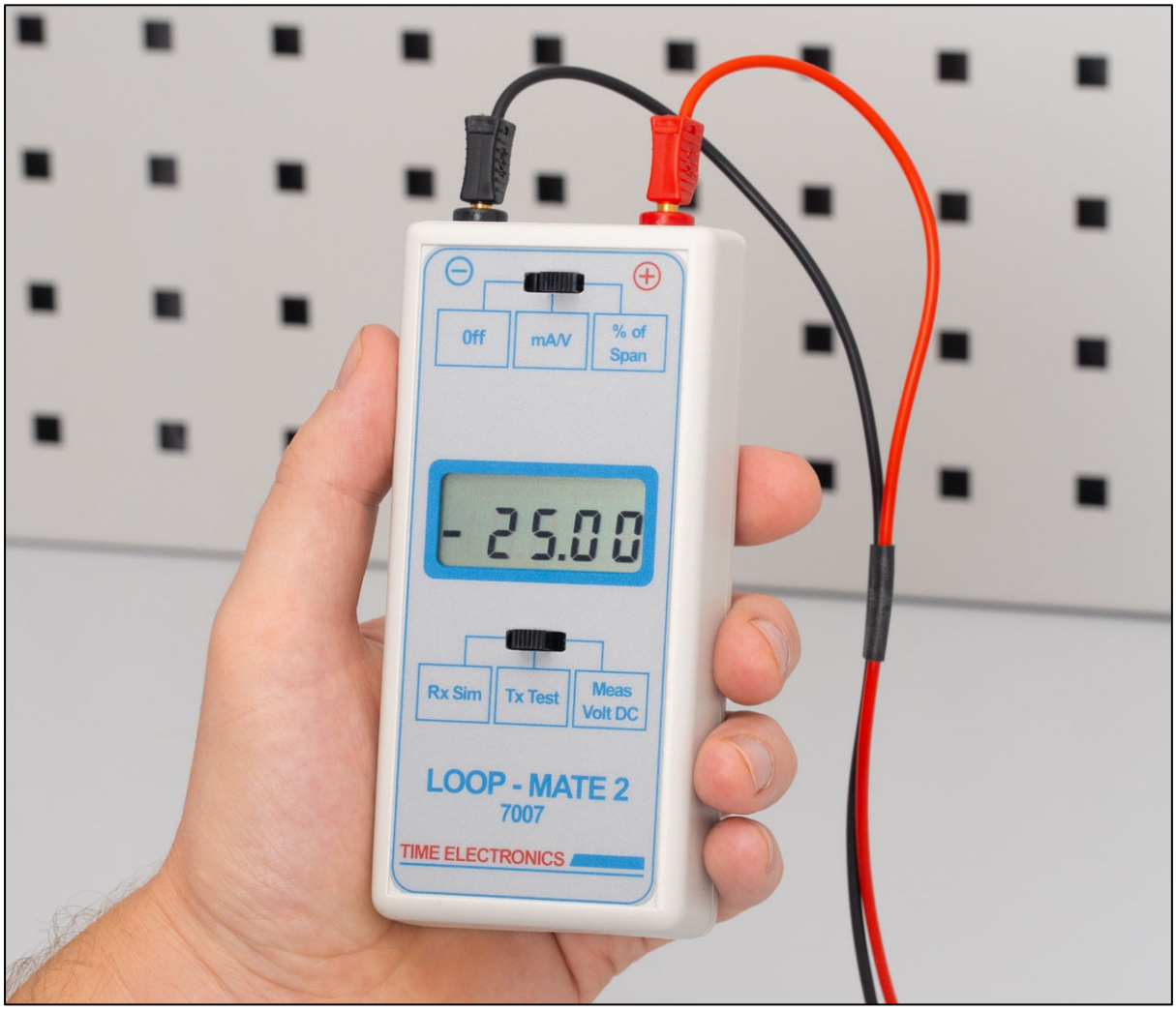

1.1 Features

- 4 - 20 mA, 0 -10 V, 0 - 50 V ranges
- LCD 4 digit display, mA, V, % of range
- Accuracy 0.05 %
- RxSim, TxTest, or 50 mA / 50 V modes
- Internal loop supply, 25 mA max
- Battery powered 9 V PP3
- Supplied with carry case and test leads

1.2 Description

The 7007 LoopMate 2 is a dedicated loop signal indicator (RxSim) with an in-built 24 V loop drive supply (TxTest). The operator can select the loop type, and also the type of units, either direct (mA) or % of span display. The loop signal is shown on an easy-to-read LCD display to an accuracy of 0.05% either in mA, V, or % of span.

It is a cost-effective process instrument suitable for service and maintenance engineers. It combines simple operation with the accuracy required for most process applications. Used in conjunction with the 7006 LoopMate 1 they provide full process loop testing capabilities, facilitating quick location of faults, testing and re-calibration.

In addition to TxTest (transmitter test) and RxSim (receiver simulation) the 7007 can be used to measure DC voltage in the process loop up to 50 V.

The unit is powered by a PP3 type battery. Rechargeable batteries can be used if required.

It comes complete with carrying pouch, leads and user manual.



1.3 Specifications

Functions	RxSim, TxTest, Meas Volt DC.
Ranges	**RxSim:** 0 to 50 mA or 0% to 100% (4-20mA). **TxTest** (RxSim plus internal 24V DC loop drive)**:** 0 to 25 mA or 0% to 100% (4-20mA). **Meas Volt DC**: 0 to 50 V DC or 0% to 100% (0 to 10 V).
Accuracy	0.05% of Span (% of span) 0.05% of Range (mA/V).
Indication	4.5 digit LCD display
Connections	Two 4 mm recessed sockets
Power	PP3 battery
Case Material	ABS plastic
Carrying Pouch	Leatherette material. Includes compartment for leads and spare battery.
Leads	4mm gold plated connectors.
Temperature Co-efficient	The unit stays in specification over operating temperature range.
Operating Temperature	0 to 50 °C.
Storage Temperature	-30 to 70 °C.
Operating Humidity	10 to 90% non-condensing, 25 °C.
Dimensions	H 140 x W 65 x D 27 mm (6.0 × 2.5 × 1.0 in).
Weight	200 grams (7 oz).
Options	C145: Traceable calibration certificate (Factory). C144: Accredited calibration certificate (ISO 17025). 7006: Loop-Mate 1: Loop Simulator (separate product).

2 Front panel controls

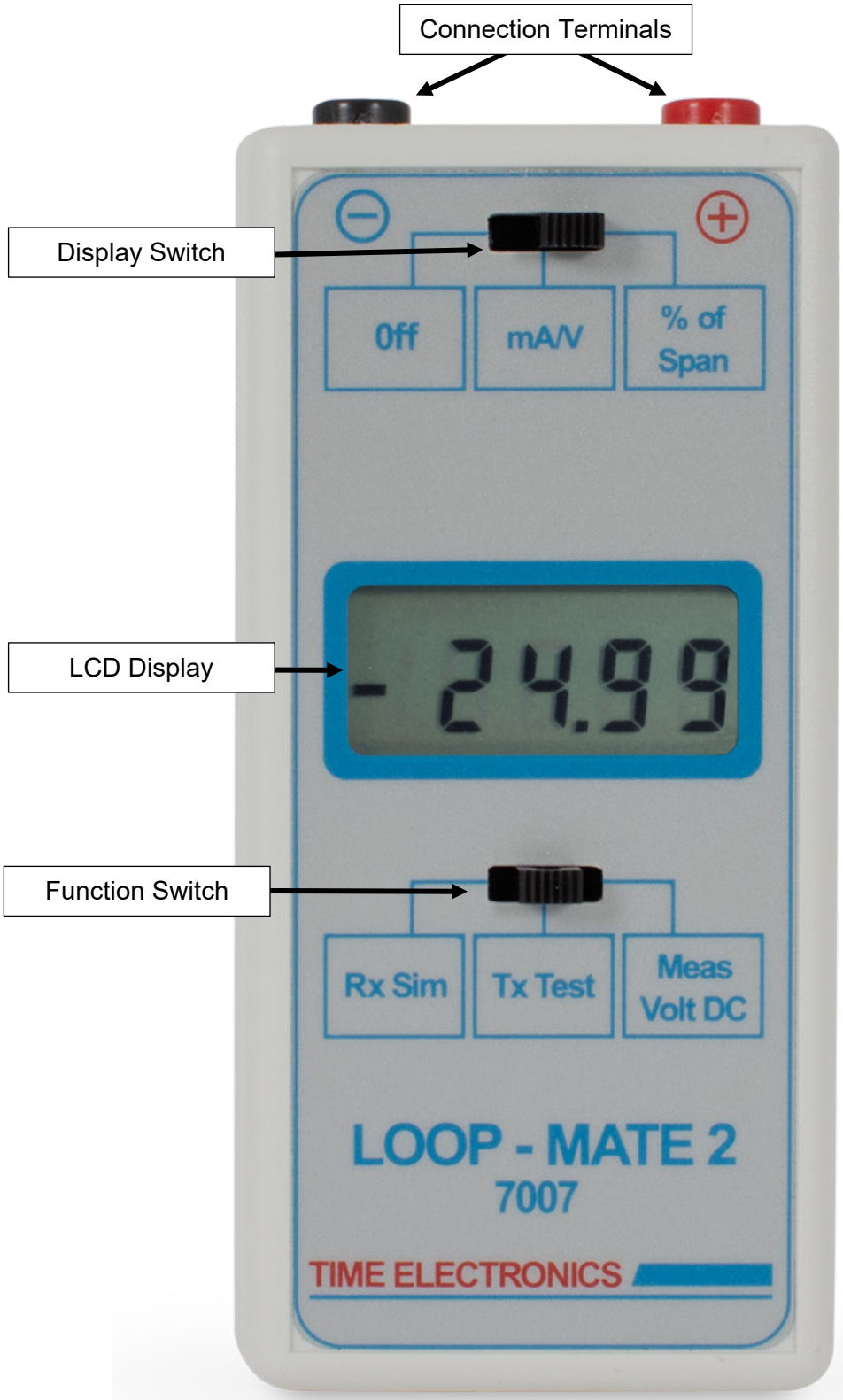

3 Operation

3.1 Function Select

The Loop-Mate 2 has 3 functions:

1. **Function 1** .....Rx SIM
2. **Function 2** .....Tx TEST
3. **Function 3** .....Meas Volt DC

These are selected using the function select switch.

3.2 Display Select

For RxSim and TxTest the signal can be displayed either direct (mA) or % of span.

These are selected using the display select switch, which also turns off the Loop-Mate 2.

3.3 Description of typical process loop components

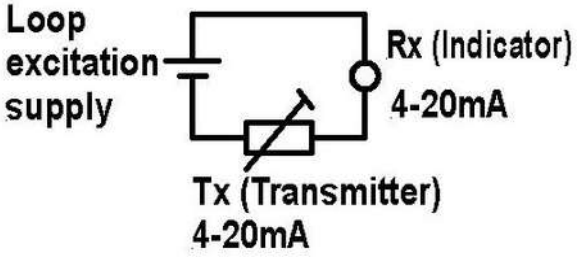	4 - 20 mA process loop
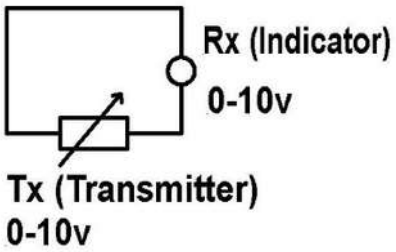	0 - 10 V process loop
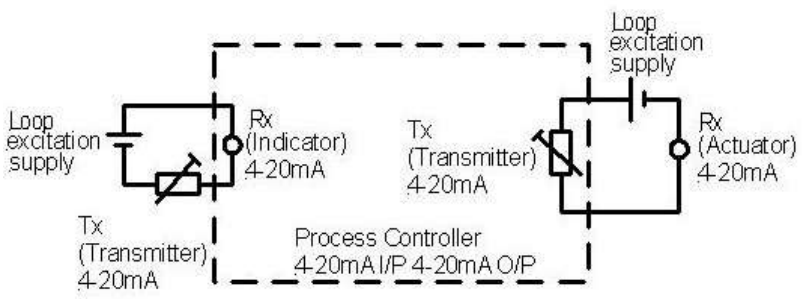	4-20 mA Process loop and 4 - 20 mA Control loop. *This can be used for closed loop control.*

Tx (transmitter):

This component converts physical signals such as pressure, temperature, flow, and level etc, into the loop signals (4 - 20 mA or 0 - 10 V).

Rx (receiver):

This component measures the loop signal and either displays it (indicator) or converts it to another form e.g. digital output for control purposes, (controller).

Process Controllers:

This device usually contains both Rx (signal loop) and Tx (control loop) components, which operate in separate loops. The Rx and Tx can be either 4 - 20 mA or 0 - 10 V.

Loop excitation supply:

A DC power supply (nominally 24 V) that drives the loop.

3.4 Rx Sim function

The unit displays the loop current in either mA (0-50 mA) or percentage of span (4-20 mA), depending on the position of the display select switch.

3.4.1 Operation

1. Connect the unit to the process loop observing the correct polarity.
2. Set the function switch to **RxSim**.
3. Turn the unit on, selecting the desired display units, using the display switch.

Note: If the loop current is less than 4 mA, negative % of span will be displayed.

See table below.

Loop Current (mA)	Display Reading
Open Circuit	-25.00
1	-18.75
2	-12.50
3	- 06.25
4	00.00

3.4.2 Connection

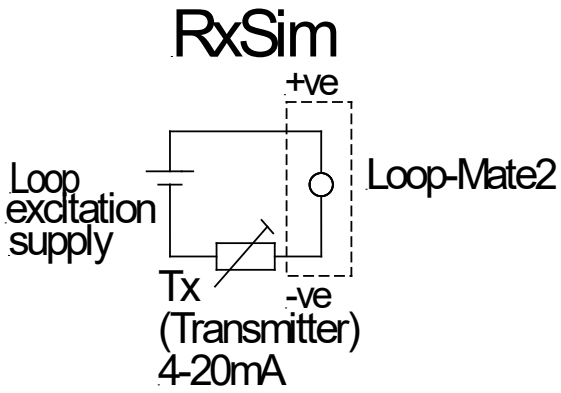

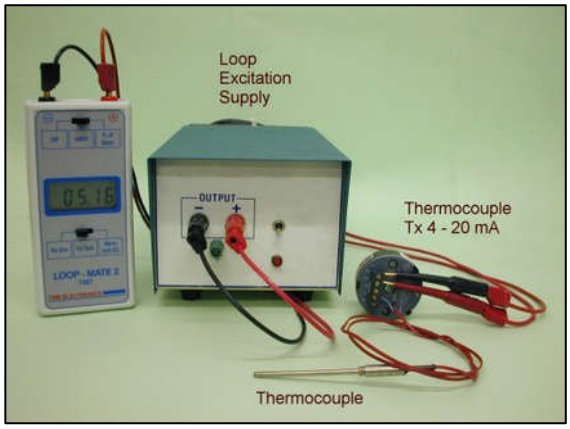

3.5 Tx Test function

With TxTest selected, a loop excitation drive supply (24v) is internally generated.

The display will show the loop current as either mA (0-50 mA) or percentage of span (4-20 mA), depending on the position of the display select switch.

3.5.1 Operation

1. Connect the unit to the process loop observing the correct polarity.
2. Set the function switch to **TxTest**.
3. Turn the unit on, selecting the desired display units, using the display switch.

Note: If the loop current is less than 4 mA, negative % of span will be displayed.

See table below.

Loop Current (mA)	Display Reading
Open Circuit	-25.00
1	-18.75
2	-12.50
3	- 06.25
4	00.00

3.5.2 Connection

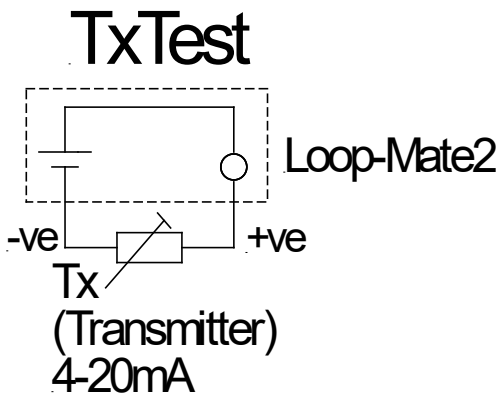

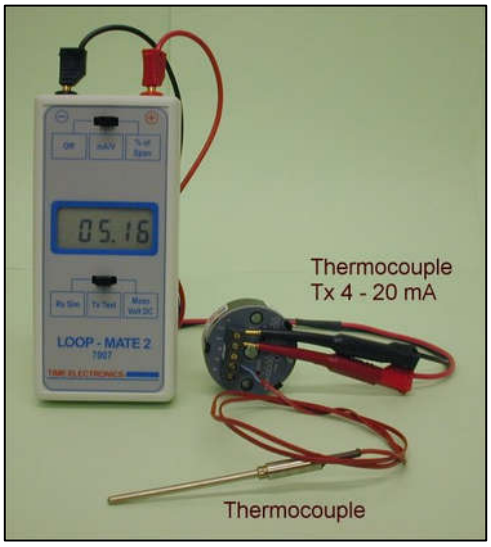

3.6 Meas Volt DC function

When the unit is set to Meas Volt DC it displays the voltage either as Volts (0 - 50 V) or percentage of span (0 – 10V), depending on the position of the display select switch.

3.6.1 Operation

1. Connect the unit to the process loop observing the correct polarity.
2. Set the function switch to **Meas Volt DC**.
3. Turn the unit on, selecting the desired display units, using the display switch.

3.6.2 Connection

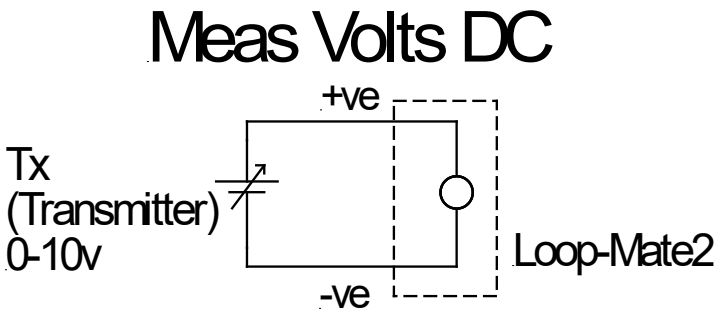

Note: The unit can be used to measure DC voltages up to a maximum of 50V DC.

4 Power supply

4.1 Battery life

A single PP3 battery powers the unit. Types that can be used are Zinc Carbon (250mAh), Alkaline (450mAh), Lithium (1200mAh) and rechargeable (150mAh). For best performance Lithium batteries are recommended. Under typical usage an Alkaline (450mA) battery will last for approximately 14 - 16 hours of continuous operation. Assuming the Loop-Mate2 is used for approximately 3 hours per day the batteries will last for a week or more. Continuous operation on the TxTest function will shorten the battery life. The unit will display ‘low battery’ when the battery voltage is too low. At this point replacement of the battery is necessary. It is recommended that a spare battery be always carried in the compartment provided in the carrying pouch.

4.2 Battery replacement

Slide off the back cover of the case and remove the battery from its compartment. Unclip the battery and replace it with a new PP3 as shown below. Then slide the battery cover back into place.









5 Maintenance

5.1 Calibration

5.1.1 Calibration equipment required

Precision DC current source (Time Electronics 1024 for example).

Precision DC voltage source (Time Electronics 5025 for example).

Multimeter (DMM) with accuracy of 0.02% or better. Examples of suitable instruments are Time Electronics 5075 or HP 34401A.

Calibration should be performed at 23 °C ± 5 °C.

5.1.2 Calibration of Rx Sim

Direct reading (mA)

1. Connect the precision dc current source to the input terminals of the Loop-Mate 2.
2. Set the Function switch to RxSim.
3. Set the Display switch to mA/V.
4. Set the output of the DC current source to those shown (mA input to Loop-Mate 2) in the table below and check the display reading is between the Min and Max values.

Allowed error specification:

mA Input	Min value (mA)	Max value (mA)
10	9.975	10.025
20	19.975	20.025
30	29.975	30.025
40	39.975	40.025
50	49.975	50.025

Percentage of Span

1. With the Loop-Mate 2 open circuit, set the Function switch to RxSim.
2. Set the Display switch to % of span.
3. The display should read –25.00 ± 0.01.
4. Switch off the unit.
5. Connect the precision dc current source to the input terminals of the Loop-Mate2.
6. Set the Function switch to RxSim.
7. Set the Display switch to % of span.
8. Set the output of the DC current source to those shown (mA input to Loop-Mate2) in the table below and check the display reading is between the Min and Max values.

Allowed error specification:

% of span	mA input	Min value (%)	Max value (%)
0	4	-0.05	0.05
25	8	24.95	25.05
50	12	49.95	50.05
75	16	74.95	75.05
100	20	99.95	100.05

If the reading on the Loop-Mate 2 display is out of specification then adjustment of the calibration will be required (see later in this section).

5.1.3 Calibration of Meas Volt DC

Direct reading (V)

1. Connect the precision dc voltage source to the input terminals of the Loop-Mate 2.
2. Set the Function switch to Meas Volt DC.
3. Set the Display switch to mA/V.
4. Set the output of the dc voltage source to those shown (Volts input to Loop-Mate 2) in table below, and check the display reading is between the Min and Max values.

Allowed error specification:

Volts input	Min value (V)	Max value (V)
0	-0.025	0.025
10	9.975	10.025
20	19.975	20.025
30	29.975	30.025
40	39.975	40.025
50	49.975	50.025

Percentage of Span

1. Connect the precision dc voltage source to the input terminals of the Loop-Mate2.
2. Set the Function switch to Meas Volt DC.
3. Set the Display switch to % of span.
4. Turn on the Loop-Mate 2.
5. Set the output of the dc voltage source to those shown (Volts input to Loop-Mate 2) in table below, and check the display reading is between the Min and Max values.

Allowed error specification:

% of span	Volts input	Min value (%)	Max value (%)
0	0	-0.05	0.05
25	2.50	24.95	25.05
50	5.00	49.95	50.05
75	7.50	74.95	75.05
100	10.00	99.95	100.05

If the reading on the Loop-Mate 2 display is out of specification then adjustment of the calibration will be required (see later in this section).

5.2 Adjustment of Calibration

When Loop-Mate 2 is found to be out of specification the procedures described in the following sections can be followed to adjust and calibrate instrument.

5.2.1 Disassembling Loop-Mate 2

1. First remove the battery compartment cover and disconnect the battery, as shown in section 4.2 of this manual.

2. Remove the 4 screws from the back of the case.

3. Position the Loop-Mate 2 so that the front panel is facing upwards.

4. Carefully lift the case lid.

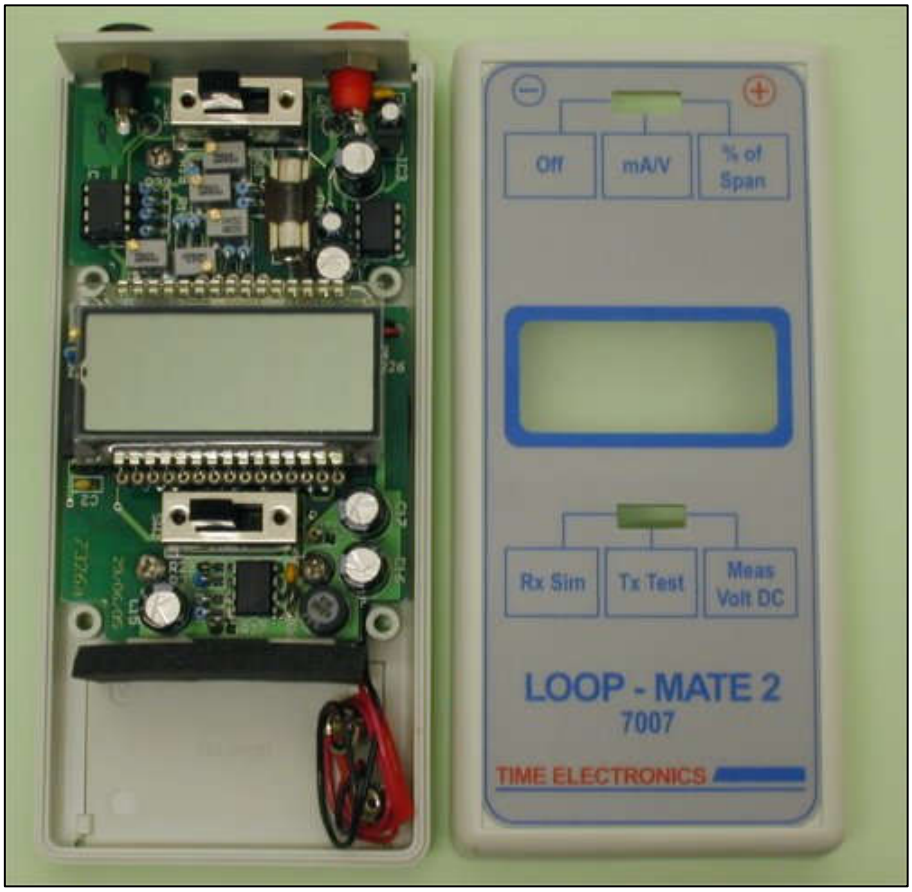

5. Then reconnect the battery.

5.2.2 Trimmer Locations (used for adjusting the calibration)

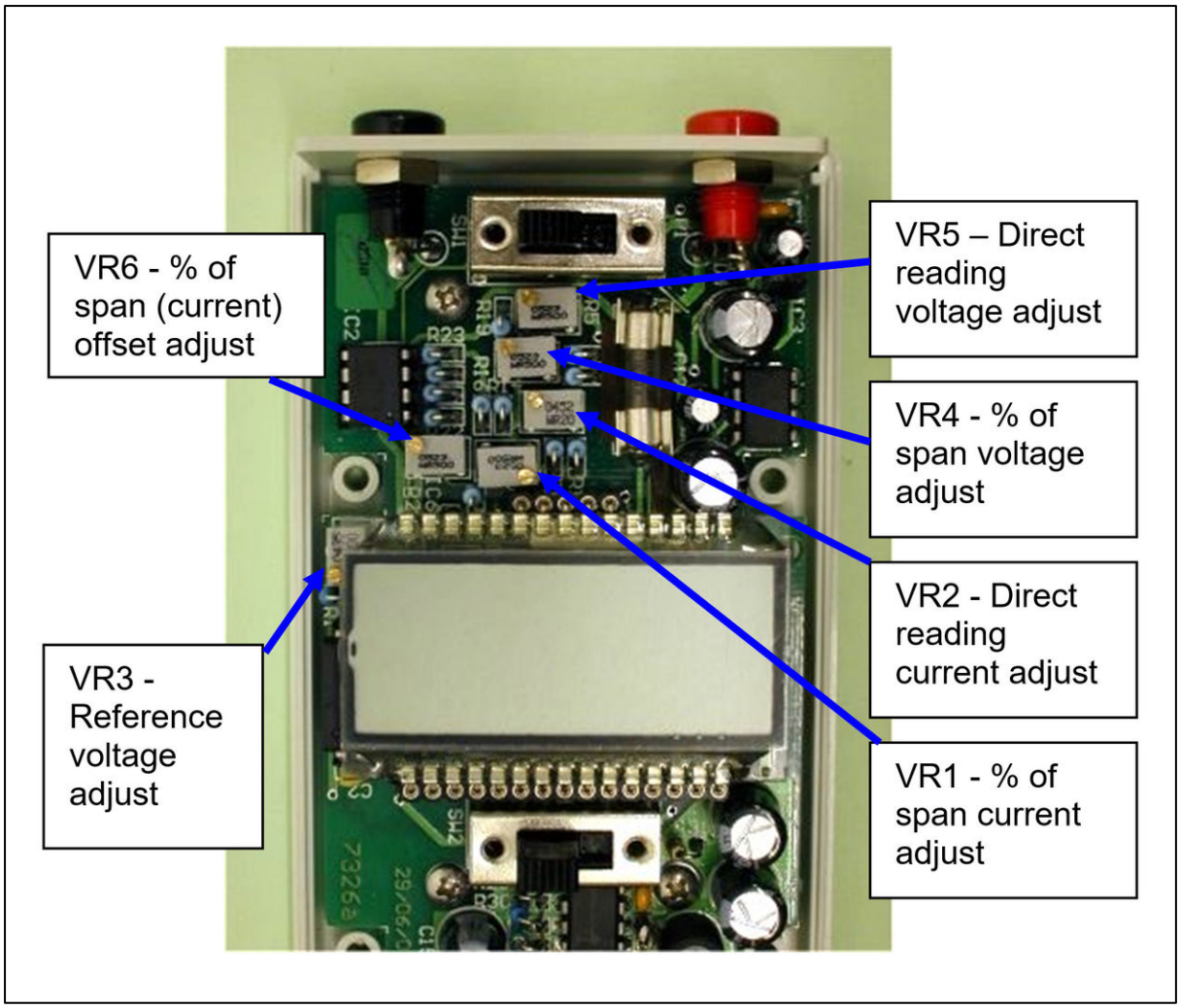

5.2.3 Reference voltage check and adjustment

1. Set the function switch to RxSIM

2. Set the Display switch to mA/V.

3. Select the voltage scale on the DMM
   Connect a test lead from the DMM negative input to the Loop-Mate 2 minus (-) terminal.

4. Connect a test lead with a pointed probe to the DMM positive input.

5. Place the pointed probe on the pad near to VR3 as shown in the picture, thus making contact with VR3`s middle pin. The reading should be 1 V.

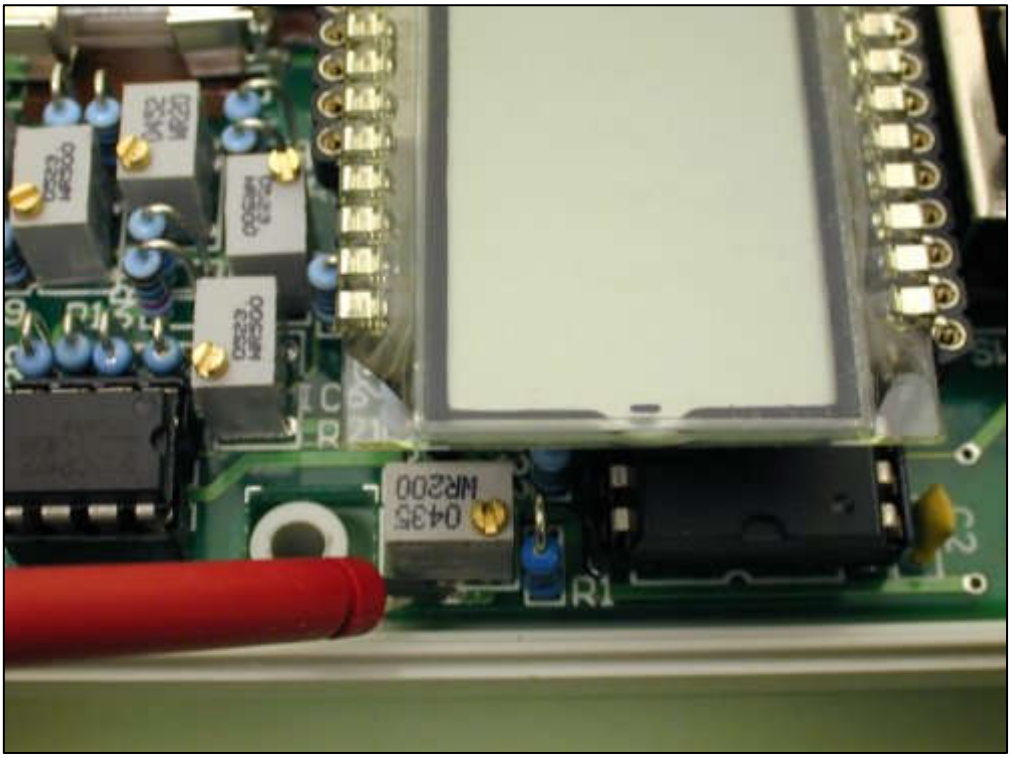

6. Adjust VR3 until 1 V is displayed on the DMM.

5.2.4 RxSim / TxTest calibration

Note: By calibrating RxSIM, TxTest is also calibrated.

Direct reading (mA)

1. Connect the precision dc current source to the input terminals of the Loop-Mate 2.
2. Set the Function switch to RxSim.
3. Set the Display switch to mA/V.
4. Set the output of the current source to 50 mA DC.

   Adjust **VR2** until the display reads 50.00

Percentage of span (%)

Offset calibration

Before connecting the Loop-Mate 2 to any test equipment,

- Set the Function switch to RxSim.
- Set the Display switch to % of span.

The display should read –25.00, if not adjust **VR6** until –25.00 ± 0.01 is displayed.

Then:

1. Connect the precision dc current source to the input terminals of the Loop-Mate2.
2. Set the Function switch to RxSim.
3. Set the Display switch to % of span.
4. Set the output of the current source to 20 mA DC.

   Adjust **VR1** until the display reads 100.00

5.2.5 Meas Volt DC calibration

Direct reading (volts)

1. Connect the precision dc voltage source to the input terminals of the Loop-Mate 2.
2. Set the function switch to Meas Volt DC.
3. Set the Display switch to Volts.
4. Select 50v dc output on the precision voltage source.

   Adjust **VR5** until the display reads 50.00.

Percentage of span

1. Connect the precision dc voltage source to the input terminals of the Loop-Mate2.
2. Set the function switch to Meas Volt DC.
3. Set the Display switch to % of span.
4. Select 10v dc output on the precision voltage source.

   Adjust **VR4** until the display reads 100.00

Repeat the Direct reading and Percentage of span calibration procedures until neither require adjust. This is required due to some interaction between the scales.

5.2.6 Re-assembly

- Disconnect the battery after re-calibration.
- Refit the lid and screw the four case screws into place.
- Replace the battery and battery compartment cover. See section 4.2.

5.2.7 Fuse Replacement

The unit is fitted with a 100 mA fuse. If no readings are displayed when using the RxSIM or TxTest function when connected to a known working process loop, it is possible that the internal fuse has blown.

To replace the fuse:

First remove the battery compartment cover and disconnect the battery, as shown in section 4.2 of this manual.

Remove the 4 screws from the back of the case.

Position the Loop-Mate2 so that the front panel is facing upwards. Carefully lift the case lid.

The fuse is located below and to the right of the Display switch as shown in the picture below.

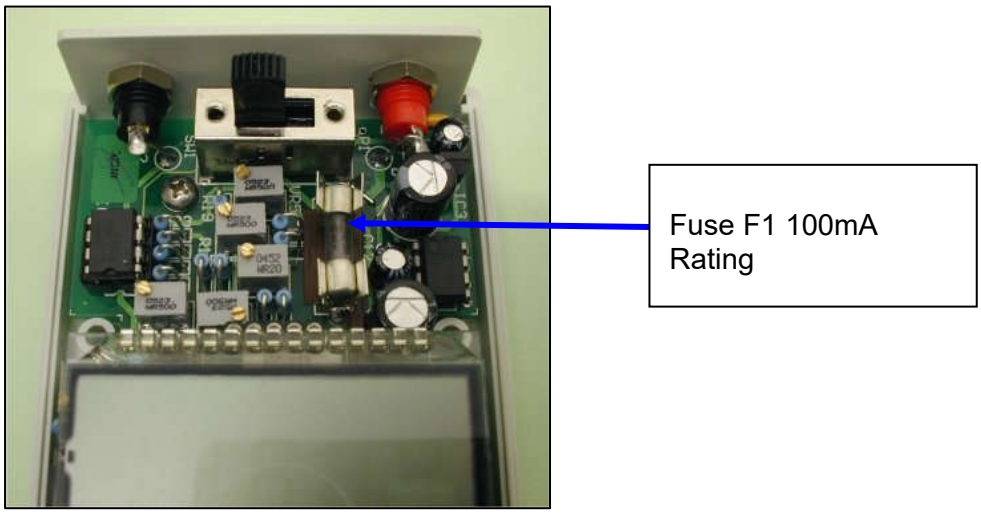

Pull out the fuse and replace with one of the same value.

Replace the case lid and screw the four case screws into place.

6 Warranty and Servicing

Warranty

The Time Electronics products carry a one-year manufacturer's warranty as standard.

Time Electronics products are designed and manufactured to the highest standards and specifications to assure the quality and performance required by all sectors of industry. Time Electronics products are fully guaranteed against faulty materials and workmanship.

Should this product be found to be defective, please contact us using the below details. Inform us of the product type, serial number, and details of any fault and/or the service required. Please retain the supplier invoice as proof of purchase.

This warranty does not apply to defects resulting from action of the user such as misuse, operation outside of specification, improper maintenance or repair, or unauthorized modification. Time Electronics' total liability is limited to repair or replacement of the product. Note that if Time Electronics determine that the fault on a returned product has been caused by the user, we will contact the customer before proceeding with any repair.

Calibration and Repair Services

Time Electronics offers repair and calibration services for all the products we make and sell. Routine maintenance by the manufacturer ensures optimal performance and condition of the product. Periodic traceable or accredited calibration is available.

Contacting Time Electronics

Online:
Please visit **www.timeelectronics.com** and select Support Request from the Contact links. From this page you will be able to send information to the Time Electronics service team who will help and support you.

By phone:
+44 (0) 1732 355993

By email:
mail@timeelectronics.co.uk

Returning Instruments

Prior to returning your product please contact Time Electronics. We will issue a return merchandise authorization (RMA) number that is to accompany the goods returning. Further instructions will also be issued prior to shipment. When returning instruments, please ensure that they have been adequately packed, preferably in the original packing supplied. **Time Electronics Ltd will not accept responsibility for units returned damaged.** Please ensure that all units have details of the service required and all relevant paperwork.

Send the instrument, shipping charges paid to:

Time Electronics Ltd
Unit 5, TON Business Park, 2-8 Morley Road,
Tonbridge, Kent, TN9 1RA.
United Kingdom.

Tel: +44(0)1732 355993
Fax: +44(0)1732 350198

Email: mail@timeelectronics.co.uk
Web Site: www.timeelectronics.com

Disposal of your old equipment



1. When this crossed-out wheeled bin symbol is attached to a product it means the product is covered by the European Directive 2002/96/EC.
2. All electrical and electronic products should be disposed of separately from the municipal waste stream via designated collection facilities appointed by the government or the local authorities.
3. The correct disposal of your old appliance will help prevent potential negative consequences for the environment and human health.
4. For more detailed information about disposal of your old appliance, please contact your city office, waste disposal service or return to Time Electronics.