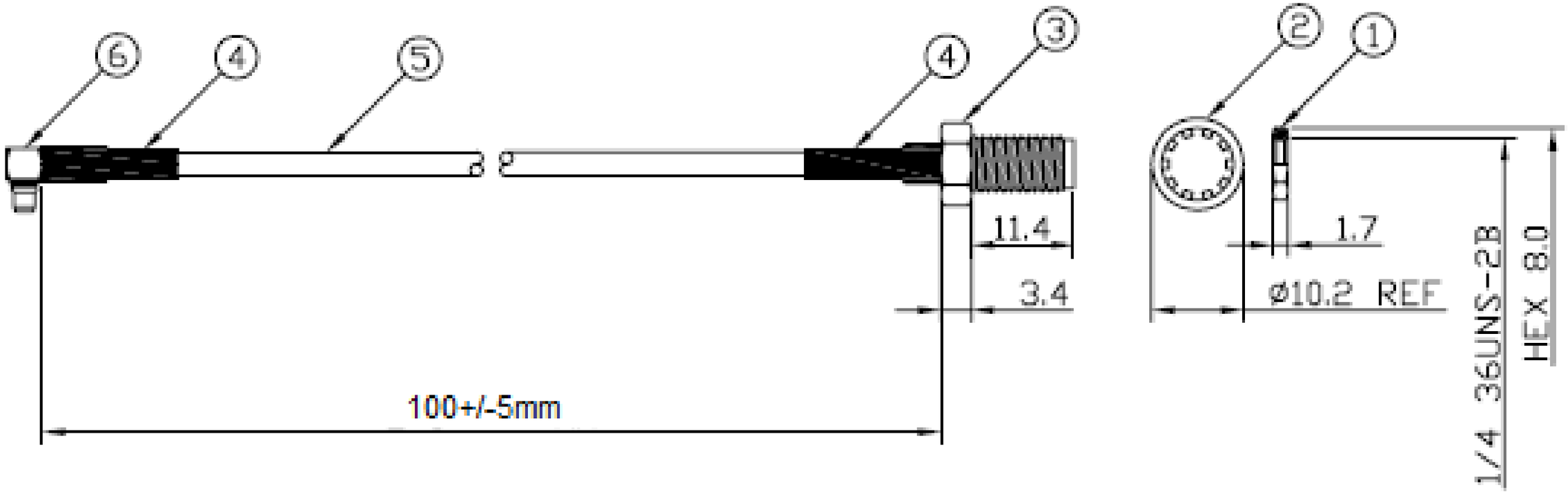

Notes

1. Nut
2. Washer
3. SMA (F) Straight bulk Jack
4. Heatshrink
5. RG-174 MIT Coxial cable black
6. MMCX Right angle plug

All Dimensions in mm

NOT TO SCALE

DESCRIPTION

Cable Assy SMA(F) straight plug to MMCX(RA) plug cable Assy 100mm

FILENAME	DRAWN BY	DATE	REVISED	PAGE
CBA-SMA-MMCXRA.VSD	John Fairall		02/09/2009	1 of 1

REVISIONS

ZONE	REV	DESCRIPTION	DATE	APPROVED
N/A	1	First Issue	1.8.09	
	2			
	3			
	4			
	5			
	6			