Technical datasheet



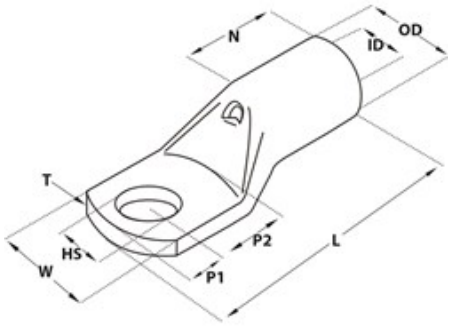

16-6

E0845038

Cable Lug KRF, 16mm2, M6

Product Properties:

Suitable for Class 5 conductor	Yes
Suitable for Class 6 conductor	Yes
Insulated	No
Max. current (Imax)	97 A
Number of mounting holes	1 .
Flange shape	Ring shape
Colour insulation	Other
Slender flange model	No
With sight-hole	Yes
Conductor category	Several
Max Temp	150 °C
Surface protection	Tinned
Material	Copper
Connecting angle	180° (horizontal)
Series	KRF/KSF (10-500mm2)

Dimensions:

HS	6.5 mm
ID	6 mm
OD	9 mm
T	3 mm
P1	7 mm

P2	10 mm
L	34 mm
N	10 mm
W	13 mm
MOQ	100 .
Unit	pcs
Bolt dimension (metric)	6 .
Nominal cross section	16 mm²
Series	KRF/KSF (10-500mm2)

Approvals:

Approved according to CE	Yes
Approved according to UKCA	Ja
Approved according to DNV	Yes

Compliance:

CA Proposition 65	In compliance
Conflict Minerals	Contain "Tin"
Extended Minerals	Contain "Copper"
PFAS	No PFAS
POPs	No POPs
REACH	No SVHC (Latest. 05 Nov 2025)
RoHS	RoHS 3 (2015/863)
SCIP	Not Applicable
US TSCA	No (5 PBT Subs, Feb 2021)
ECCN (EU)	No CLASS
ECCN (US)	EAR99

Other information:

ETIM-Class	EC001051 - Tube cable lug for copper conductors
ETIM-Release	9.0
Trademark	NEMIQ
Product Group	Cable lugs
Search Description	RÖRKABELSKO KRF
Alternative SKU	16-6
E-no	E0845038

Logistic information:

Barcode	733117611981
Country of origin	CN
E-no	E0845038
Item status	Stock item, normally in stock with reservation for in between sales.

MOQ	100 .
Stock code	16-6
Taric code	85369010
Unit	pcs

*We reserve the right to make technical changes and disclaim any typographical errors.
