E40176

Screw-in adapter for process sensors

ADAPT /SI/9/ /G1/4 /

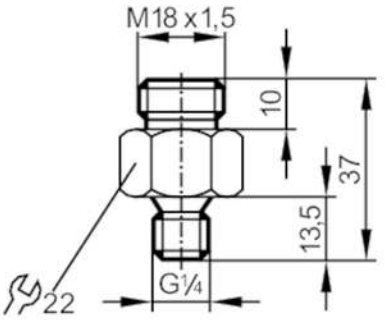

Application		
Application		for industrial applications
Media		liquids and gases
Pressure rating	[bar]	30
Tests / approvals		
Pressure Equipment Directive EAC		The adapter is intended for use in devices, machines and installations that do not fall under the categories of the technical rule TR CU 032/2013.
Mechanical data		
Weight	[g]	62.8
Dimensions	[mm]	M18 x 1.5
Thread designation		M18 x 1.5
Materials		Hastelloy C-4 (2.4610)
Sensor connection		M18 x 1,5
Process connection		threaded connection G 1/4
Insertion depth	[mm]	13.5; (measuring probe SID, SFD, TN)
Accessories		
Items supplied		sealings: 1, AFM
Remarks		
Pack quantity		1 pcs.