Cylinder accessories → piston rod mountings, series CM2

AP2 rod clevis Steel, galvanized



00105171

Fig.1

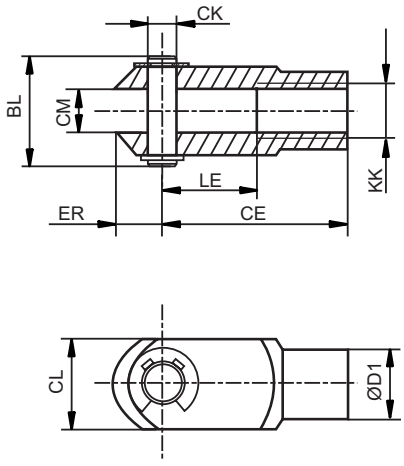

Fig. 2

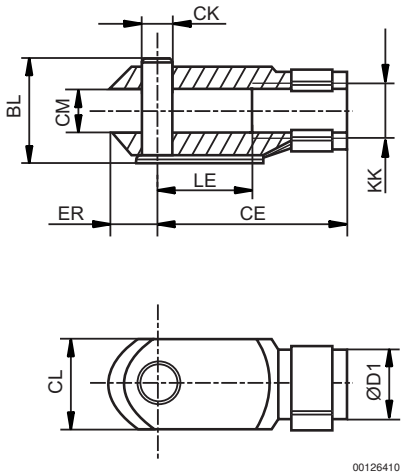

00126410

Part No.	KK	Fig.	BL	CE	ØCK e11	CL	CM	ØD1	ER	LE
1822122028	M4	2	11	16	4	8	4	8	5	8
1822122008	M5	2	13.5	20	5	10	5	9	6	10
1822122009	M6	2	16	24	6	12	6	10	7	12
1822122010	M8	2	21,5	32	8	16	8	14	10	16
1822122024	M10x1,25	2	26	40	10	20	10	18	12	20
1822122025	M12x1,25	2	31	48	12	24	12	20	14	24
1822122005	M16x1,5	2	39	64	16	32	16	26	19	32
1822122004	M20x1,5	2	50	80	20	40	20	34	20	40
1827001493	M27x2	1	68	110	30	55	30	48	38	54
1827001471	M36x2	1	80	144	35	70	35	60	57	72
1827001472	M42x2	1	98	168	40	85	40	70	64	84
8958000122	M10	2	26	40	10	20	10	18	12	20
8958000132	M12	2	31	48	12	24	12	20	14	24

Part No.	Material	Surface	Weight [kg]					
1822122028	Steel	galvanized	0.01					
1822122008	Steel	galvanized	0.01					
1822122009	Steel	galvanized	0.02					
1822122010	Steel	galvanized	0.05					
1822122024	Steel	galvanized	0.1					
1822122025	Steel	galvanized	0.16					
1822122005	Steel	galvanized	0.4					
1822122004	Steel	galvanized	0.7					
1827001493	Steel	galvanized	2					
1827001471	Steel	galvanized	4.35					
1827001472	Steel	galvanized	6.6					
8958000122	Steel	galvanized	0.1					
8958000132	Steel	galvanized	0.16					