Accessories

Series for Safety switches SLC

Description **EMR-F-1**	Article number **6051101003**

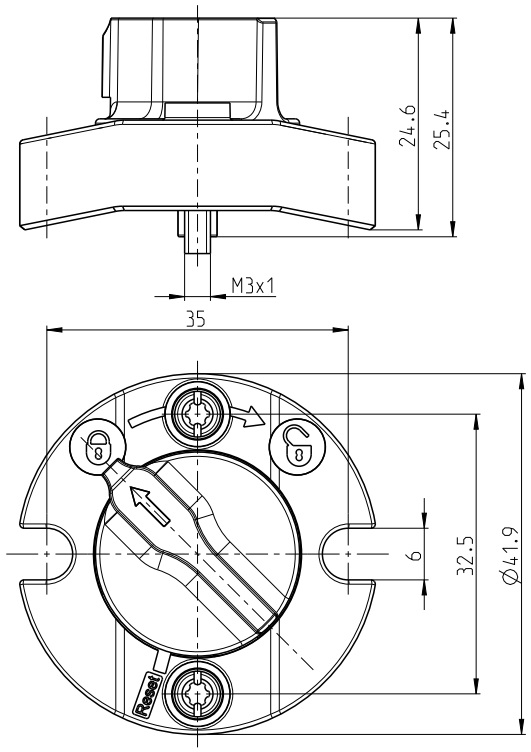

Mechanical data	
Material	Thermoplastic, glass fibre reinforced (UL94-V0)