PRODUCT DETAILS

ARTICLE: 22055FR

WHEEL N 100X30/40 PLAIN BORE SWIVEL FORK M22 + BRAKE



Wheel series N

Wheels with injected polyurethane coating 58 Sh.D on polyamide 6 center. Available with standard shielded or stainless steel sealed precision ball bearings; standard or stainless steel roller bearings; plain bore.
Plain bore wheel.

Castor series M22

M22 series, Medium-light pressed steel fork assemblies; swivel version has double ball raceways. Zincplated.
Trailing foot brake - total stop.

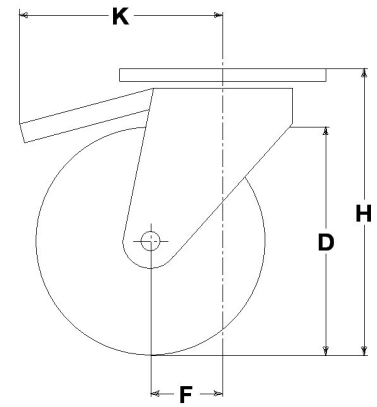

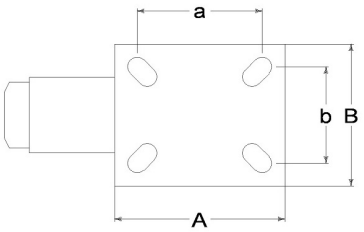

Technical data

Wheel diameter	D	100 mm
Tyre width	E	30,0 mm
Bore diameter	d	15 mm
Weight article		0,790 kg
Hub width	L	40 mm
Overall height	H	128 mm
Top plate outer dimensions	AxB	102x83 mm
Bolt hole spacing	axb	76x55 mm
Bolt hole spacing	axb	80x60 mm
Fixing bolt diameter	g	M8
Offset	F	37 mm
Fork width	U	40 mm
Load Capacity		120 kg

Related Articles

Spare part wheel: 9068
Basic version: 22055
Version with thread-guards: 22055PF
Version with trailing brake and thread-guards: 22055FRPF

GENERAL INFORMATION / RECOMMENDATIONS AND WARNINGS
The cited text and the complete catalogue in their most up-dated versions are available in the OEM's website page www.lagspa.it/downloads. The dimensions, descriptions, specifications and illustrations herein are indicative and subject to variations without notice. The fact that products are illustrated herein does not necessarily imply they are available from stock nor does it place us under any obligation to supply them.
Tests carried out refer to the original products with original accessories: the replacement of one of the components with others of different manufacture might prevent the same results from being achieved and will automatically invalidate any guarantee. Please contact our technical service concerning any special application.