U-GAGE™ T30 Series with Analog and Discrete Outputs

Ultrasonic Sensors with TEACH-Mode Programming



U-GAGE T30 Series Features

- Fast, easy-to-use TEACH-mode programming; no potentiometer adjustments
- Program both outputs together or independently, with either an upward or a downward analog output slope
- Remote TEACH input for security and convenience
- Choose models with 150 mm to 1 m range (7.9" to 39.4") or 300 mm to 2 m range (11.8" to 78.7")
- Wide operating temperature range of -20° to +70°C (-13° to +158°F)
- Choose models with NPN or PNP discrete output, plus 0 to 10V dc or 4 to 20 mA sourcing analog output
- LED indicators for Power ON/OFF; Signal Strength; and Analog/Discrete Outputs Conducting
- Choose 2 m (6.5') or 9 m (30') integral unterminated cable or 5-pin Euro-style QD connector
- Compact, self-contained sensor package
- Rugged design for use in demanding sensing environments; rated IEC IP67, NEMA 6P

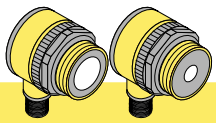

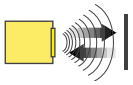

Ultrasonic, 228 or 128 kHz

U-GAGE T30 Series Proximity Mode Models

Models	Range and Frequency	Cable*	Supply Voltage	Discrete Output	Analog Output	Response Time
T30UINA **T30UINAQ**	150 mm to 1 m (5.9" to 39") 228 kHz	2 m (6.5') 5-pin Euro QD	12 to 24V dc	NPN (sinking)	4 to 20 mA Sourcing	48 milliseconds
T30UIPA **T30UIPAQ**		2 m (6.5') 5-pin Euro QD		PNP (sourcing)		
T30UUNA **T30UUNAQ**		2 m (6.5') 5-pin Euro QD	15 to 24V dc	NPN (sinking)	0 to 10V dc Sourcing	
T30UUPA **T30UUPAQ**		2 m (6.5') 5-pin Euro QD		PNP (sourcing)		
T30UINB **T30UINBQ**	300 mm to 2 m (11.8" to 79") 128 kHz	2 m (6.5') 5-pin Euro QD	12 to 24V dc	NPN (sinking)	4 to 20 mA Sourcing	96 milliseconds
T30UIPB **T30UIPBQ**		2 m (6.5') 5-pin Euro QD		PNP (sourcing)		
T30UUNB **T30UUNBQ**		2 m (6.5') 5-pin Euro QD	15 to 24V dc	NPN (sinking)	0 to 10V dc Sourcing	
T30UUPB **T30UUPBQ**		2 m (6.5') 5-pin Euro QD		PNP (sourcing)		

* NOTE: 9 m (30') cables are available by adding suffix **"W/30"** to the model number of any cabled sensor (e.g., **T30UUNA W/30**)

U-GAGE T30 Series Overview

The U-GAGE is an easy-to-use ultrasonic sensor, ideal for demanding environments. Simple push-button programming provides flexibility for a variety of applications. Excellent for measurement applications such as sensing of liquid levels in a tank or, for example, determining box heights for sorting purposes.

Each sensor includes both an analog and a discrete output, which may be programmed independently with different window limits or together with identical limits. Each output has the option of being set with a sensing distance set point centered within a 10-mm window.

U-GAGE T30 Series Programming

Window Limits
Window limits may be taught to the sensor in several ways. The following methods describe the programming procedures using the push buttons on the back of the sensor; remote programming (remote TEACH) procedures are described on page 4.

NOTE: When the sensor changes state between PROGRAM and RUN modes, all of the LED indicators turn OFF momentarily, before the appropriate LEDs come ON as described below. The sensing window limits expand temporarily to full scale (max range) during PROGRAM mode.

Teaching Limits for Either Analog or Discrete Output

1. Choose the output for the first set of window limits (analog or discrete) and push and hold the corresponding button until the green Power LED goes OFF and the appropriate yellow Output LED turns ON (solid). This indicates the sensor is waiting for the first limit.

2. Position the target for the first limit and briefly “click” the same button. This will teach the sensor the first limit. The yellow Output LED will flash to acknowledge receiving the first window limit; it is now waiting for the second limit.

3. Position the target for the second limit and “click” the button again. This will teach the sensor the second limit. The yellow Output LED turns OFF and the green Power LED comes ON; the sensor is now in normal RUN mode.

4. Repeat for the other output (analog or discrete) if a second output is desired.

NOTE: Press and hold the same button > 2 seconds (before teaching the second limit) to exit PROGRAM mode without saving any changes. The sensor will revert to the last saved program.

Teaching Analog or Discrete Limits Using the Auto-Zero Feature
For some applications, a sensing distance set point centered within a minimum sensing window may be required. The TEACH procedure for this application is simple: teaching the same limit twice causes the sensor to program a 10-mm window centered on the position taught (position ±5 mm).

NOTE: The sensor allows for some forgiveness in this procedure. If the two limits are not exactly the same (but closer than the minimum 10-mm window required), the sensor will put the set point at the “average” of the two limits.

Banner Engineering Corp. • Minneapolis, U.S.A.
www.bannerengineering.com • Tel: 763.544.3164

Teaching Identical Limits for Both Analog and Discrete Outputs Simultaneously
To set both the analog and the discrete outputs at exactly the same limits, both may be set simultaneously.

1. Push and hold either the Analog or the Discrete programming push button until the yellow Output LED turns ON. Push and hold the other push button until its yellow Output LED turns ON. The sensor is waiting for the first limit.

2. Position the target for the first limit and "click" either programming push button. Both yellow LEDs will flash to acknowledge receiving the first window limit; the sensor is now waiting for the second limit.

3. Position the target for the second limit and "click" either button again to teach the sensor the second limit.

4. The green Power LED will come ON to indicate that the sensor will now function in normal RUN mode; both yellow Output LEDs will remain ON if the outputs are conducting within the window limits.

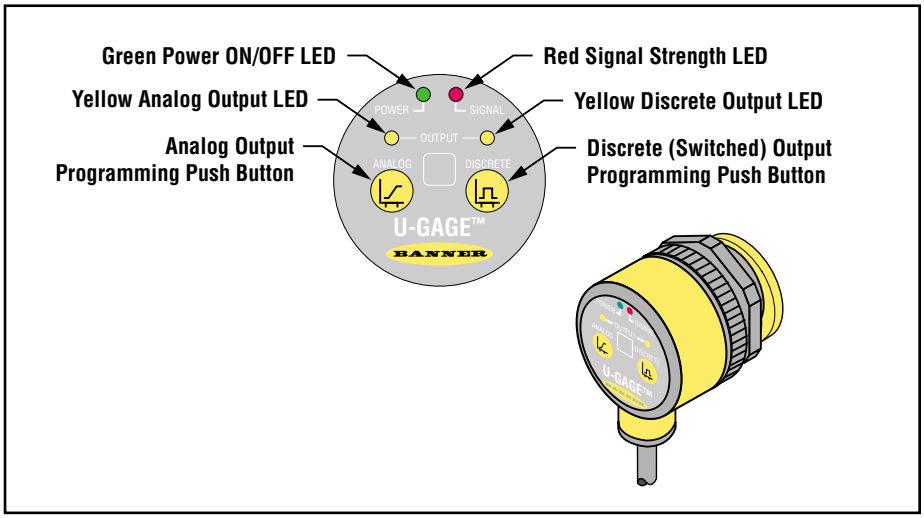

Figure 1. U-GAGE T30 Series sensor programming push buttons and indicators

General Notes on Programming:

1. The sensor will return to RUN mode if the first TEACH condition is not registered within 120 seconds.

2. After the first limit is taught, the sensor will remain in PROGRAM mode until the TEACH sequence is finished.

3. Press and hold the programming push button > 2 seconds (before teaching the second limit) to exit PROGRAM mode without saving any changes. The sensor will revert to the last saved program.

Remote Programming

To program the sensor remotely or to disable the keypad, the Remote Programming function may be used. Disabling the keypad prevents anyone on the production floor from adjusting any of the programming settings. Connect the gray wire of the sensor to +12 to 24V dc, with a remote programming switch connected between them. NOTE: The impedance of the remote teach input is 55 kΩ.

Programming is accomplished by following the sequence of input pulses. The duration of each pulse (corresponding to a push button "click"), and the period between multiple pulses, are defined as: 0.04 seconds < T < 0.8 seconds.

- 1 pulse: Programs first discrete limit. Wait > 0.8 sec. Next pulse programs second discrete limit.
- 2 pulses: Programs first analog limit. Wait > 0.8 sec. Next pulse programs second analog limit.
- 3 pulses: Programs first analog and discrete limit. Wait > 0.8 sec. Next pulse programs second analog and discrete limit.
- 4 pulses: Disables (locks out) or enables the keypad for security.

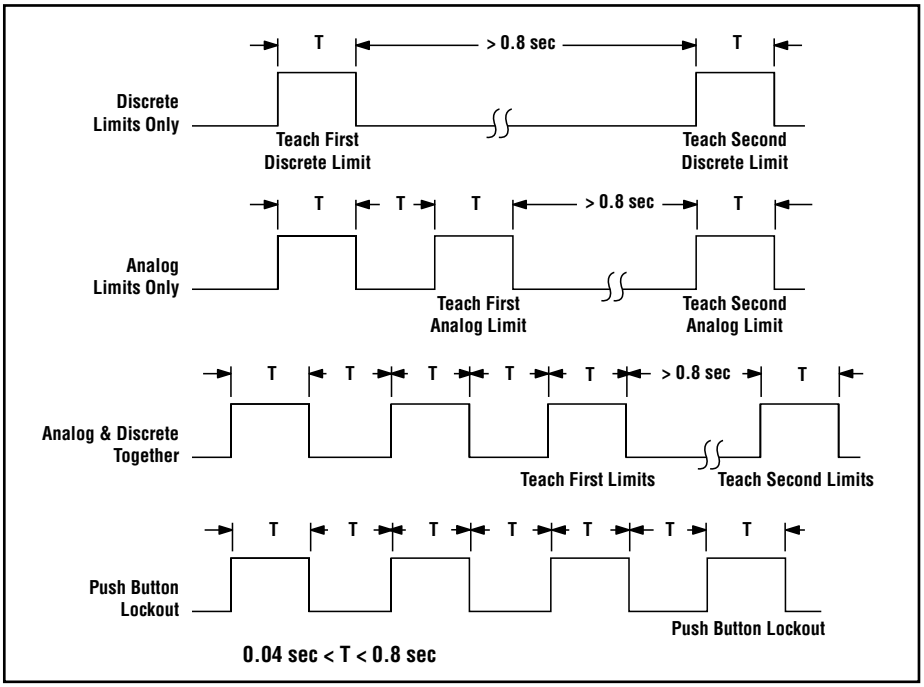

Figure 2. Timing programs for remote TEACH programming

NOTE: Hold the Remote line high > 2 seconds (before teaching the second limit) to exit PROGRAM mode without saving any changes. The sensor will revert to the last saved program.

RUN Mode

NOTE: All LED indicators momentarily go OFF when sensor changes state between PROGRAM and RUN modes.

Signal LED
The red Signal LED indicates the strength and condition of the sensor's incoming signal.

Signal LED Status	Indicates
OFF	No signal is received, or the target is beyond the range limitations of the sensor (with some tolerance beyond the recommended minimum and maximum sensing distance)
Flashing	Relative received signal strength

Output LEDs
Each yellow Output LED lights when a target is sensed within the programmed window limits.

Power ON/OFF LED
The green Power ON/OFF LED indicates the operating status of the sensor.

Power ON/OFF LED	Indicates
OFF	Power is OFF (or in PROGRAM mode, if other LEDs are ON)
ON Solid	Sensor is operating normally (power is ON, RUN mode)
Flashing	Discrete output is overloaded (RUN mode)

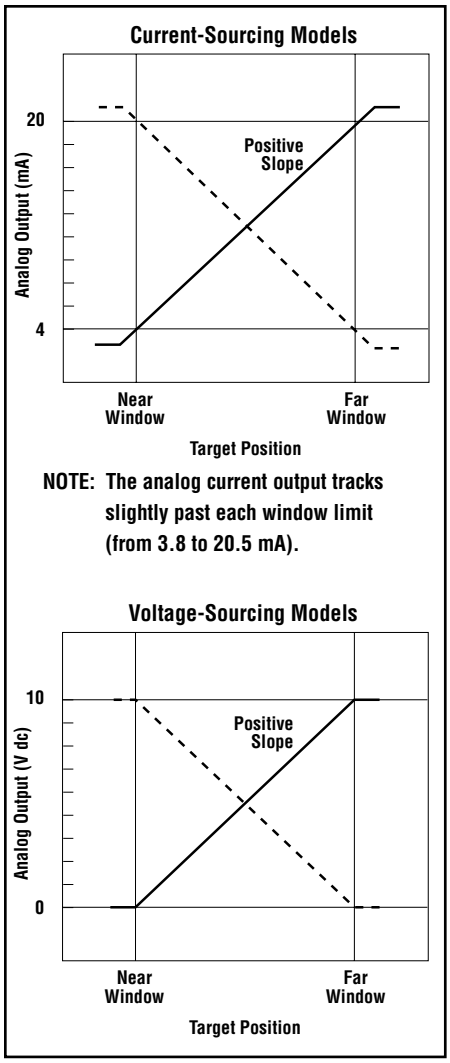

Figure 3. Output current as a function of target position

Analog Output

The U-GAGE T30 Series sensor may be programmed for either a positive or a negative output slope, based on which condition is taught first (see Figure 3). If the near limit is taught first, the slope will be positive; if the far limit is taught first, the slope will be negative. Banner's scalable analog output automatically distributes the output signal over the width of the programmed sensing window.

The U-GAGE T30 also features a 2-second hold upon loss of the analog signal, which is useful for harsh and unstable applications. In the event of analog signal loss for longer than 2 seconds, the analog output goes to 3.6 mA or 0V dc, which may be used to trigger an alarm.

Self-Diagnostic Error Mode

In the unlikely event of a microprocessor memory error, all of the LEDs will flash in sequence. If this occurs, the setup parameters have been lost and the sensor may be corrupt. Contact your Banner representative for further information.

U-GAGE™ T30 Series with Analog and Discrete Outputs

U-GAGE T30 Series Specifications

Proximity Mode Range	**"A" suffix models:** 150 mm (5.9") min. near limit; 1 m (39") max. far limit **"B" suffix models:** 300 mm (11.8") min. near limit; 2 m (79") max. far limit
Supply Voltage	**Current-sourcing analog output models:** 12 to 24V dc (10% max. ripple) at 90 mA, exclusive of load **Voltage-sourcing analog output models:** 15 to 24V dc (10% max. ripple) at 90 mA, exclusive of load
Supply Protection Circuitry	Protected against reverse polarity and transient voltages
Output Configurations	**Discrete (switched) output:** SPST solid-state switch conducts when target is sensed within sensing window; choose NPN (current sinking) or PNP (current sourcing) models **Analog output:** Choose 0 to 10V dc sourcing or 4 to 20 mA sourcing output models; output slope may be selected via TEACH sequence (see Window Limit Programming on pages 2-4)
Output Ratings	**Discrete (switched) output:** 100 mA maximum **Off-state leakage current:** less than 5 microamps **On-state saturation voltage:** less than 1V at 10 mA and less than 1.5V at 100 mA **Analog output:** **Voltage sourcing:** 0 to 10V dc (at 1K ohm minimum resistance) **Current sourcing:** 4 to 20 mA, 1 ohm to Rmax $R_{max} = \frac{V^{supply} - 7V}{20\ mA}$
Output Protection	Protected against continuous overload and short-circuit; transient over-voltage; no false pulse on power-up
Output Response Time	**Discrete output:** **"A" suffix models:** 48 milliseconds **"B" suffix models:** 96 milliseconds **Analog output:** **"A" suffix models:** 48 milliseconds average, 16-millisecond update **"B" suffix models:** 96 milliseconds average, 32-millisecond update
Sensing Performance (Specified using a 10 cm x 10 cm aluminum target at 25ºC under fixed sensing conditions.)	**Analog sensing resolution:** ±0.25% of measured distance **Analog linearity:** ±0.5% of full-scale sensing range **Sensing repeatability:** ±0.25% of distance **Minimum window size:** 10 mm (0.4") **Hysteresis of discrete output:** 2.5 mm (0.10")
Adjustments	**Sensing window limits (analog or discrete):** TEACH-mode programming of near and far window limits may be set using membrane push buttons on sensor or remotely via TEACH input (see pages 2-4). Discrete and analog window limits may be programmed separately, or together. **Analog output slope:** the first limit taught is assigned to the minimum output value (4 mA or 0V)
Indicators	**Four status LEDs:** **In RUN mode:** Green { ON = Power ON, RUN mode; Flashing = Discrete output is overloaded } Red: Flashing = Relative received signal strength Yellow analog: ON = Target is inside window limits Yellow discrete: ON = Output conducting **In Program mode:** Green: OFF = PROGRAM mode Red: Flashing = Relative received signal strength Yellow analog { ON = Ready for first window limit; Flashing = Ready for second limit; OFF = Not teaching analog limits } Yellow discrete { ON = Ready for first window limit; Flashing = Ready for second limit; OFF = Not teaching discrete limits }

Banner Engineering Corp. • Minneapolis, U.S.A.
www.bannerengineering.com • Tel: 763.544.3164

U-GAGE T30 Series Specifications (continued)

Construction	Molded reinforced thermoplastic polyester housing
Environmental Rating	Leakproof design is rated IEC IP67; NEMA 6P
Connections	2 m (6.5') or 9 m (30') 5-conductor PVC-covered attached cable, or 5-pin Euro-style quick-disconnect fitting (see page 9 for optional quick-disconnect cables)
Operating Conditions	**Temperature:** -20° to +70° C (-4° to 158° F) **Maximum relative humidity:** 100%
Vibration and Mechanical Shock	All models meet Mil. Std. 202F requirements. Method 201A (Vibration: 10 to 60Hz max., double amplitude 0.06", maximum acceleration 10G). Also meets IEC 947-5-2 requirements: 30G, 11 ms duration, half sine wave.
Application Notes	Objects passing inside the specified near limit will produce a false response. NOTE: For more information about out-of-range and signal loss response of the analog output, see page 5.
Certifications	CE

U-GAGE T30 Series Performance Curves

U-GAGE T30 Effective Beam with Plate Target (Typical)

1-Meter Models

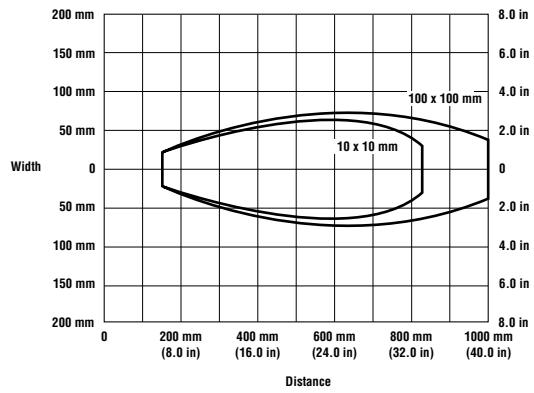

2-Meter Models

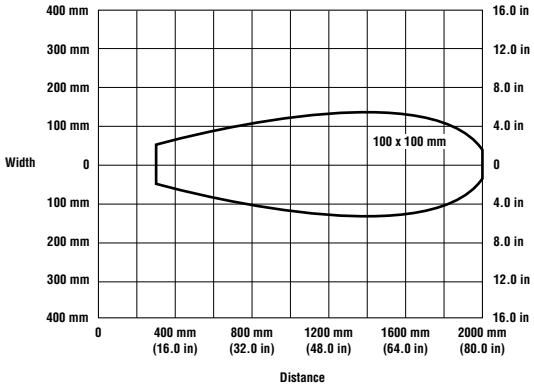

U-GAGE T30 Effective Beam with Rod Target (Typical)

1-Meter Models

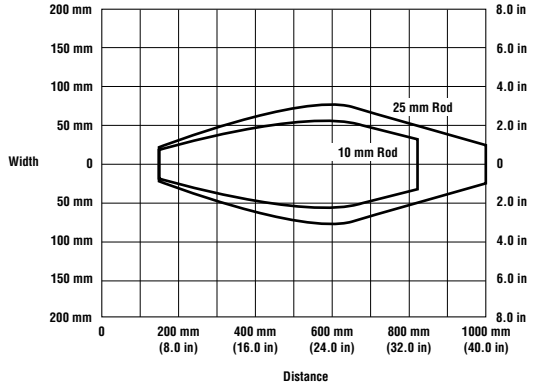

2-Meter Models

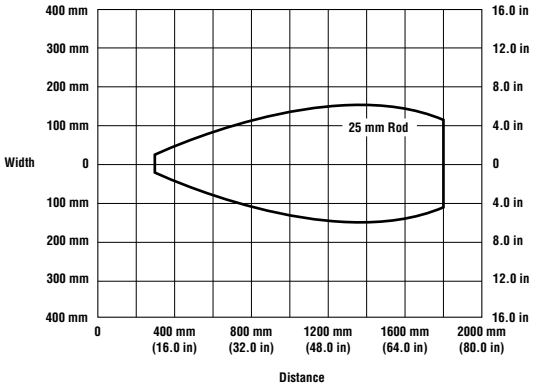

U-GAGE™ T30 Series with Analog and Discrete Outputs

U-GAGE T30 Series Dimensions

Cabled Models

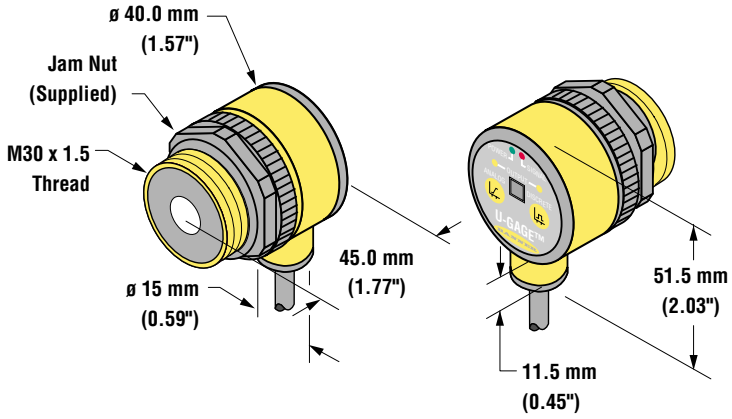

Quick-Disconnect Models

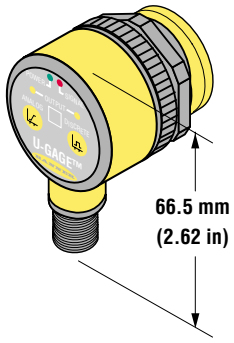

U-GAGE T30 Series Hookups

Cabled NPN

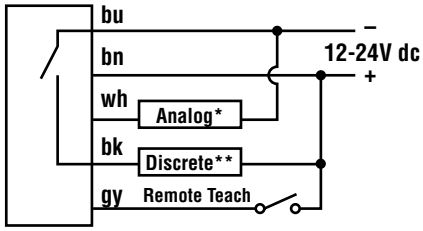

Cabled PNP

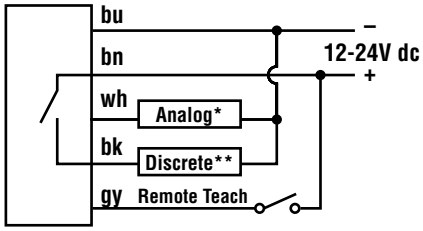

Quick-Disconnect NPN

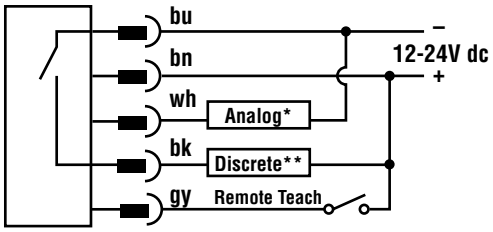

Quick-Disconnect PNP

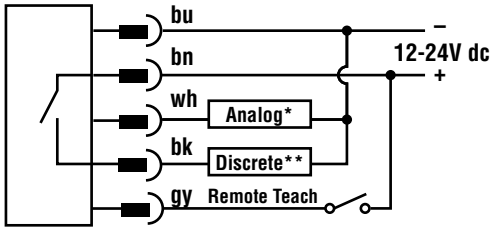

* 4-20 mA or 0-10V dc
** 100 mA maximum

Banner Engineering Corp. • Minneapolis, U.S.A.
www.bannerengineering.com • Tel: 763.544.3164

Accessories

Quick-Disconnect (QD) Cables

Style	Model	Length	Connector	Style	Model	Length	Connector
5-Pin Euro Straight	**MQDC1-506** **MQDC1-515** **MQDC1-530**	2 m (6.5') 5 m (15') 10 m (30')	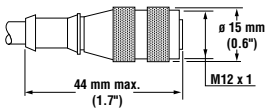	5-Pin Euro Right-angle	**MQDC1-506RA** **MQDC1-515RA** **MQDC1-530RA**	2 m (6.5') 5 m (15') 9 m (30')	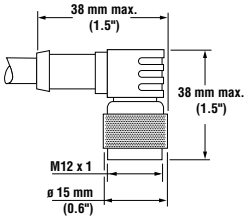

Mounting Brackets

SMB30A

- Angled-mount bracket
- Stainless steel

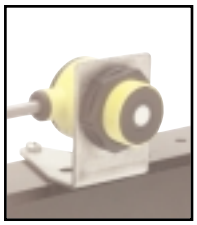

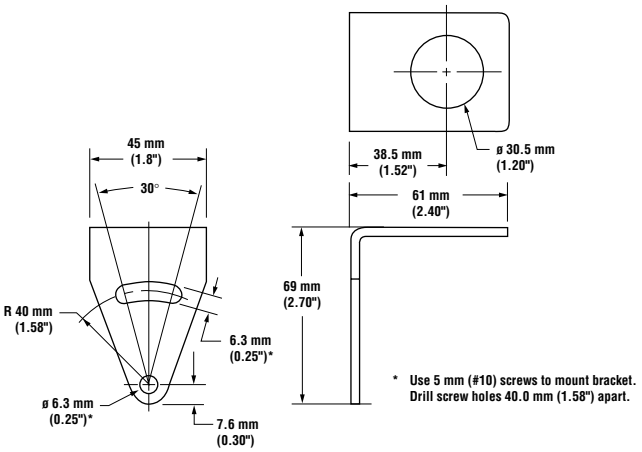

SMB1815SF

- Compact 30 mm split clamp with swivel, black reinforced thermoplastic polyester
- Stainless steel hardware included



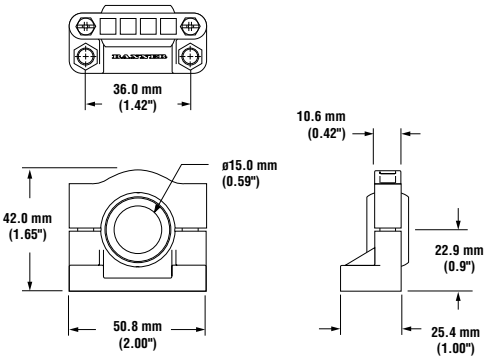

Mounting Brackets

SMB30C	• 30 mm split clamp, black reinforced thermoplastic polyester • Stainless steel hardware included	**SMB30SC**	• 30 mm split clamp with swivel, black reinforced thermoplastic polyester • Stainless steel hardware included



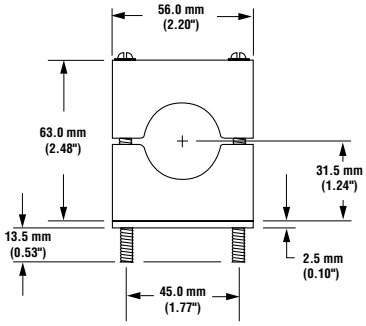

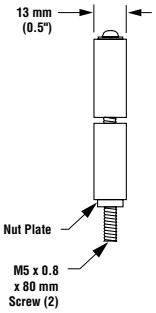



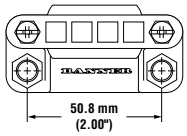

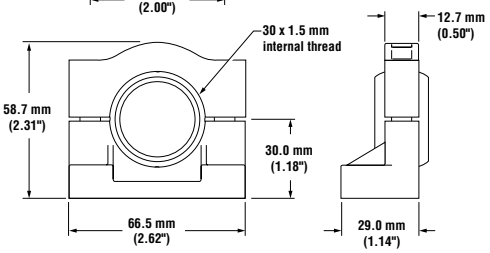

U-GAGE™ T30 Series with Analog and Discrete Outputs

more sensors, more solutions

WARRANTY: Banner Engineering Corp. warrants its products to be free from defects for one year. Banner Engineering Corp. will repair or replace, free of charge, any product of its manufacture found to be defective at the time it is returned to the factory during the warranty period. This warranty does not cover damage or liability for the improper application of Banner products. This warranty is in lieu of any other warranty either expressed or implied.

WARNING . . . Not To Be Used for Personnel Protection

Never use these products as sensing devices for personnel protection. Doing so could lead to serious injury or death.

These sensors do NOT include the self-checking redundant circuitry necessary to allow their use in personnel safety applications. A sensor failure or malfunction can cause either an energized or de-energized sensor output condition. Consult your current Banner Safety Products catalog for safety products which meet OSHA, ANSI and IEC standards for personnel protection.

Banner Engineering Corp., 9714 Tenth Ave. No., Minneapolis, MN 55441 • Phone: 763.544.3164 • www.bannerengineering.com • Email: sensors@baneng.com