Ejector, Series EBS

R412007474

2024-02-20

AVENTICS Series EBS Ejectors

The AVENTICS Series EBS ejectors are the convincing and talented multi-taskers within the AVENTICS ejector Series. Parallel to the main advantages of this ejector Series, these ejectors offer additional benefits due to their enormous versatility.



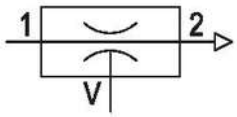

Technical data

Industry	Industrial
Activation	Pneumatically
Note	Thread connection
Type	Ejector
Version	pneumatic control, T-design
with silencer	with silencer
Nozzle Ø	0.7 mm
Min. working pressure	3 bar
Max. working pressure	6 bar
Min. ambient temperature	0 °C
Max. ambient temperature	60 °C
Min. medium temperature	0 °C
Max. medium temperature	60 °C
Medium	Compressed air
Min. oil content of compressed air	0 mg/m³
Max. oil content of compressed air	1 mg/m³
Max. particle size	5 µm
Compressed air connection	M5
Vacuum connection+	M5

Ejector, Series EBS

2024-02-20

R412007474

Max. suction capacity	16 l/min
Air consumption at p.opt.	25 l/min
Max. vacuum level at p.opt	85 %
Sound pressure level intake effect	59 dB
Sound pressure level intake effect	65 dB
Weight	0.008 kg
Housing material	Polyamide fiber-glass reinforced
Seal material	Acrylonitrile butadiene rubber
Nozzle material	Aluminum
Material threaded bushing	Aluminum
Surface threaded bushing	anodized
Silencer material	Polyethylene
Part No.	R412007474

Technical information

Note: All data refers to an ambient pressure of [[1,013] bar] and an ambient temperature of [[20]°C].

The pressure dew point must be at least 15 °C less than ambient and medium temperature and may not exceed 3 °C.

Fig. 3

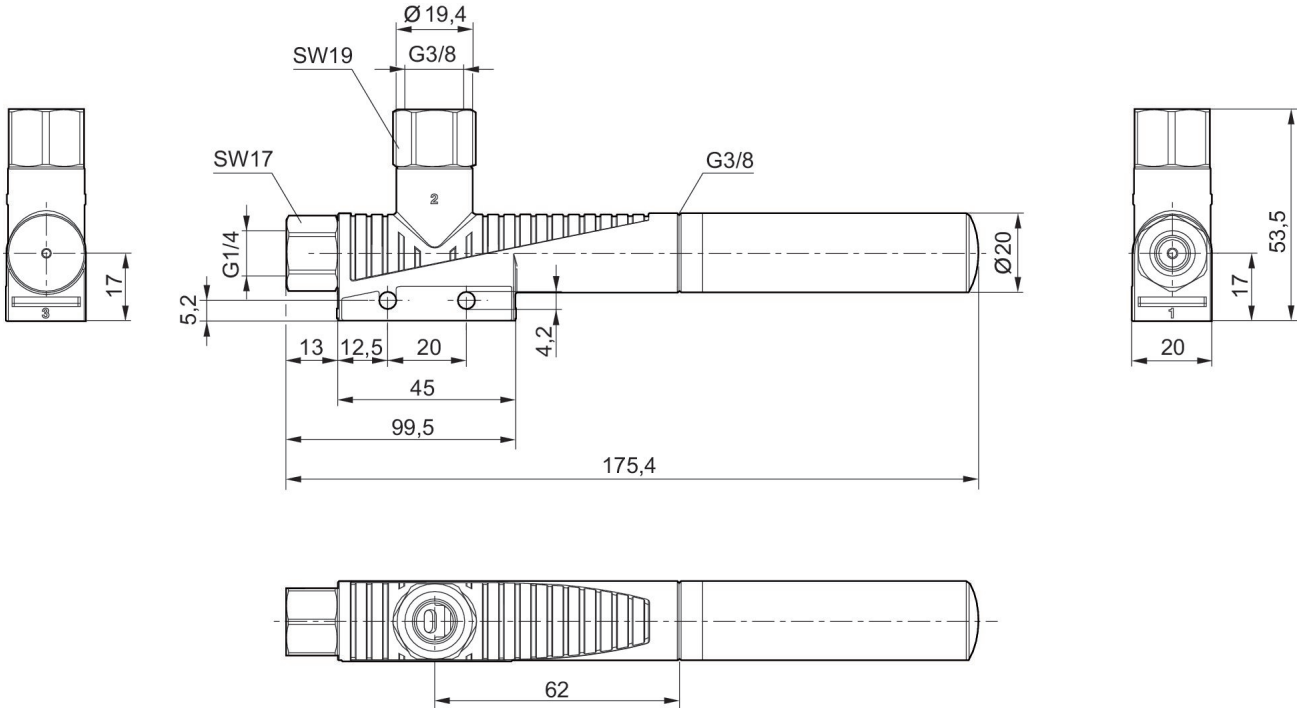

Fig. 2

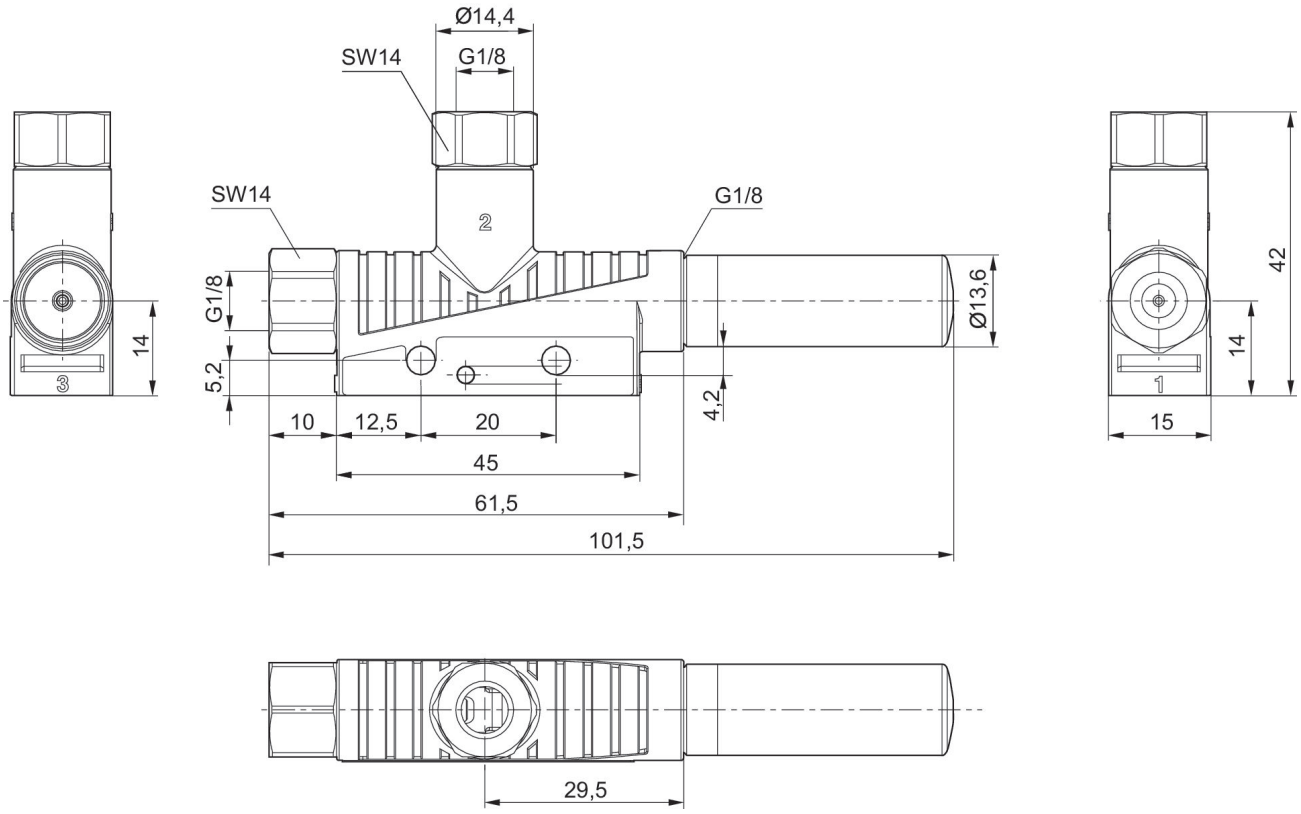
Ø14,4
SW14
G1/8
SW14
G1/8
2
G1/8
5,2
Ø13,6
4,2
14
3
42
14
1
15
10
12,5
20
45
61,5
101,5
29,5

Fig. 1

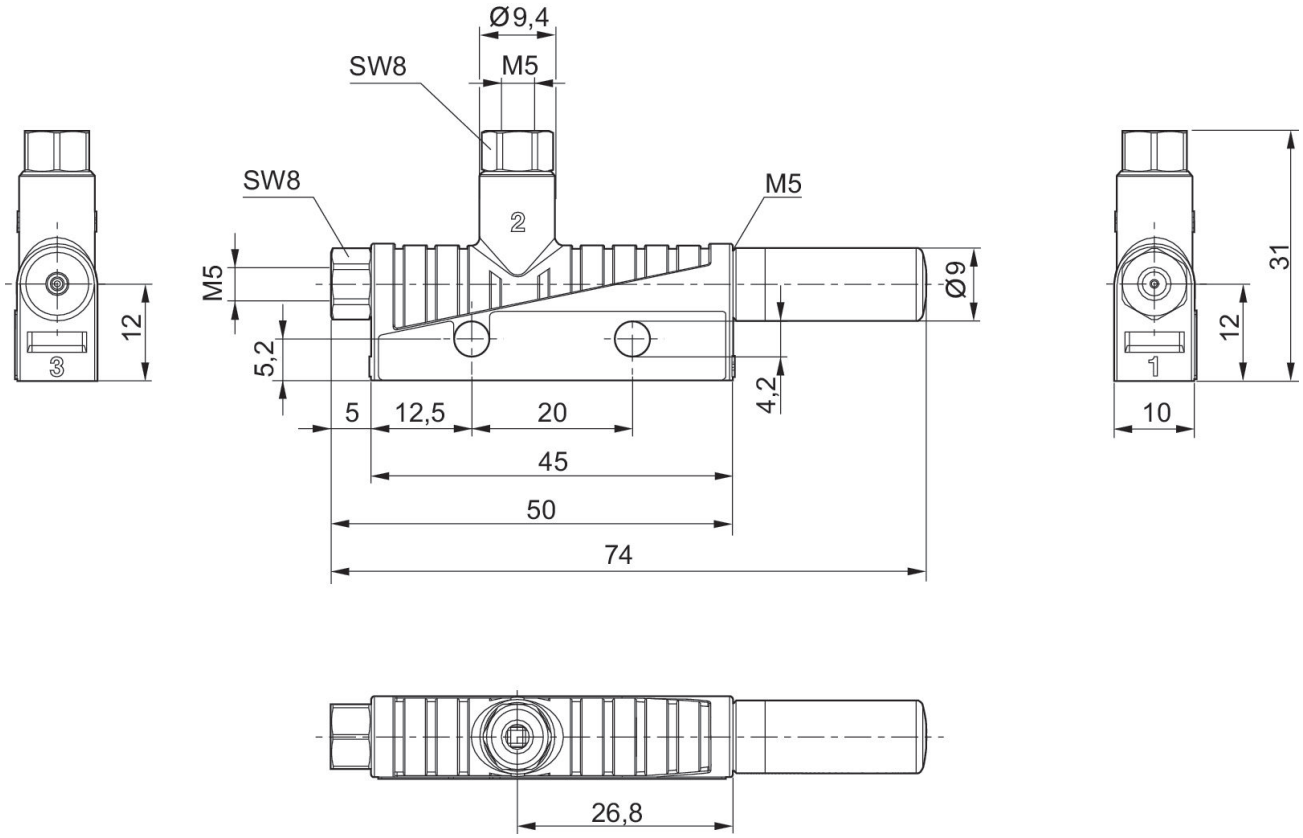

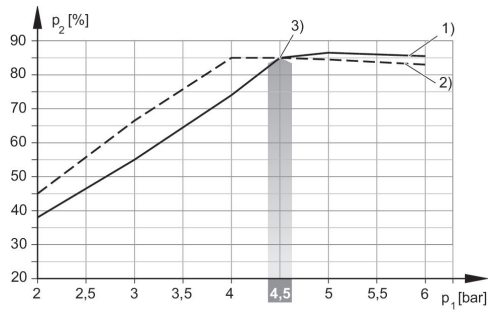

1) = Ø nozzle 1.0 mm 2) = Ø nozzle 1.5 mm
3) optimum working pressure

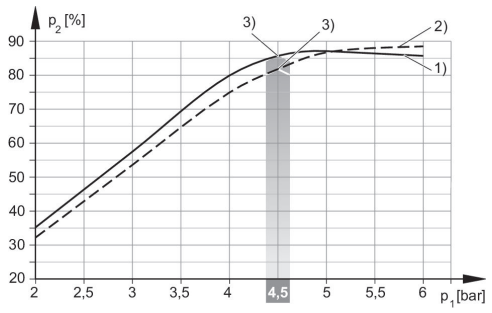

1) = Ø nozzle 2.0 mm 2) = Ø nozzle 2.5 mm
3) optimum working pressure

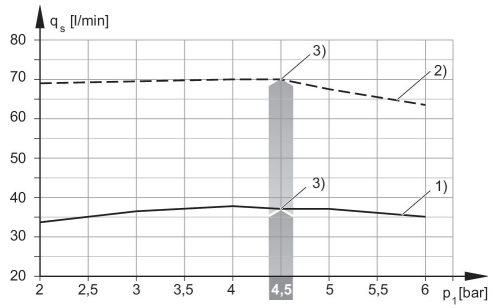

1) = Ø nozzle 1.0 mm 2) = Ø nozzle 1.5 mm
3) optimum working pressure

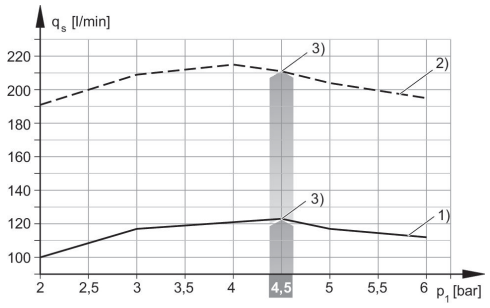

1) = Ø nozzle 2.0 mm 2) = Ø nozzle 2.5 mm
3) optimum working pressure

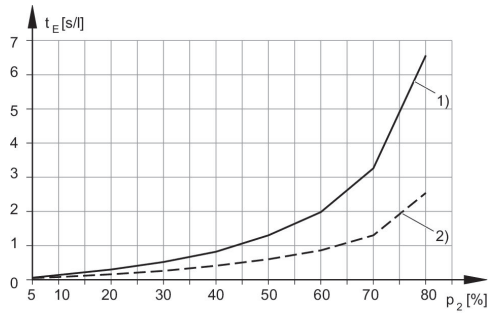

1) = Ø nozzle 1.0 mm 2) = Ø nozzle 1.5 mm

Evacuation time tE depending on vacuum p2 for 1 l volume (with optimal operating pressure p1opt)

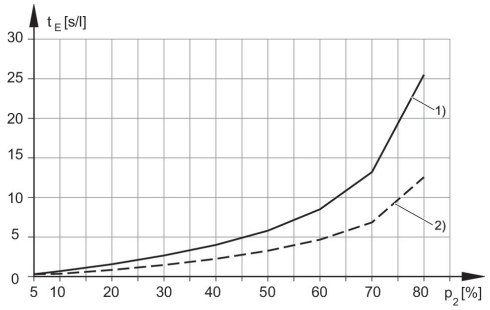

1) = Ø nozzle 0.5 mm 2) = Ø nozzle 0.7 mm

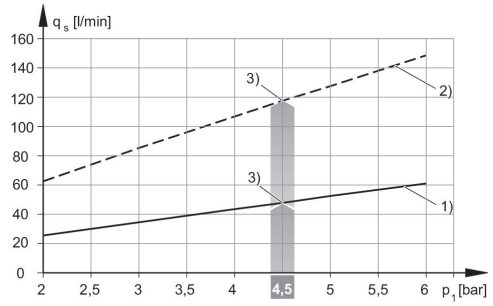

1) = Ø nozzle 1.0 mm 2) = Ø nozzle 1.5 mm
3) optimum working pressure

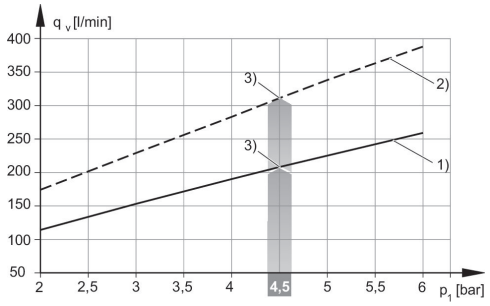

1) = Ø nozzle 2.0 mm 2) = Ø nozzle 2.5 mm
3) optimum working pressure

Air consumption qv depending on working pressure p1

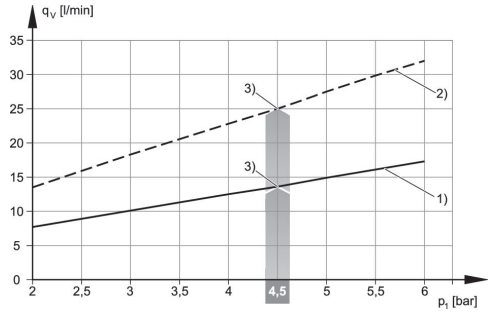

1) = Ø nozzle 0.5 mm 2) = Ø nozzle 0.7 mm
3) optimum working pressure

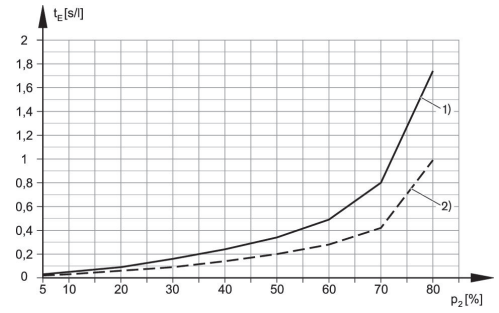

1) = Ø nozzle 2.0 mm 2) = Ø nozzle 2.5 mm

Suction capacity qs depending on working pressure p1

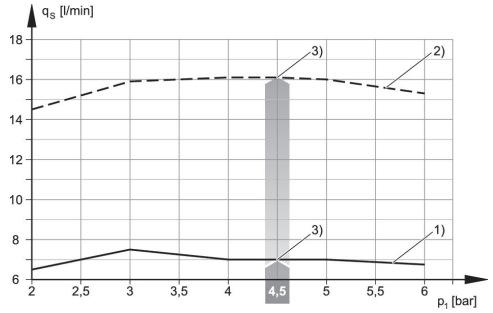

1) = Ø nozzle 0.5 mm 2) = Ø nozzle 0.7 mm
3) optimum working pressure

Vacuum p2 depending on working pressure p1

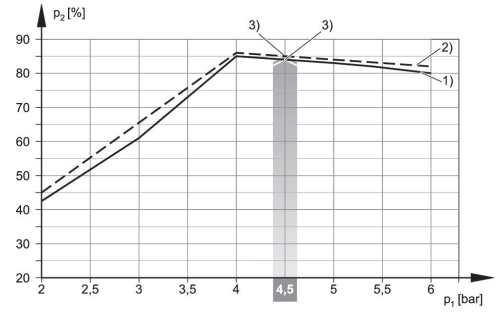

1) = Ø nozzle 0.5 mm 2) = Ø nozzle 0.7 mm
3) optimum working pressure