OF5049

Diffuse reflection sensor

OFT-FNKG/US-100

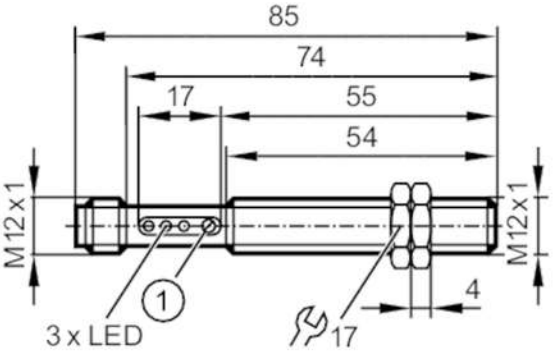

1 potentiometer

Product characteristics		
Type of light		infrared light
Housing		threaded type
Application		
Special feature		Function check output
Function principle		Diffuse reflection sensor
Electrical data		
Operating voltage	[V]	10...36 DC
Current consumption	[mA]	< 35
Protection class		II
Reverse polarity protection		yes
Type of light		infrared light
Wave length	[nm]	880
Outputs		
Electrical design		NPN
Output function		light-on/dark-on mode; (programmable)
Max. voltage drop switching output DC	[V]	2.5
Function check output		yes
Max. voltage drop of function check output	[V]	3.5
Max. current load for function check output	[mA]	10
Permanent current rating of switching output DC	[mA]	200
Switching frequency DC	[Hz]	320
Short-circuit protection		yes
Type of short-circuit protection		pulsed
Overload protection		yes
Detection zone		
Range	[mm]	1...200; (white paper 200 x 200 mm)
Range adjustable		yes

OF5049

Diffuse reflection sensor

OFT-FNKG/US-100

Max. light spot diameter	[mm]	92	
Light spot dimensions refer to		at maximum range	
Operating conditions			
Ambient temperature	[°C]	-25...60	
Protection		IP 65	
Tests / approvals			
EMC		EN 60947-5-2	
		EN 55011	class B
MTTF	[years]	601	
Mechanical data			
Weight	[g]	43.3	
Housing		threaded type	
Dimensions	[mm]	M12 x 1 / L = 74	
Thread designation		M12 x 1	
Materials		brass nickel-plated	
Lens material		PMMA	
Displays / operating elements			
Display		switching status	1 x LED, yellow
		operation	1 x LED, green
		function	1 x LED, red
Accessories			
Items supplied		lock nuts: 2	
		screwdrivers	
Remarks			
Pack quantity		1 pcs.	
Electrical connection			

Connector: 1 x M12; coding: A



OF5049

Diffuse reflection sensor

OFT-FNKG/US-100

Connection

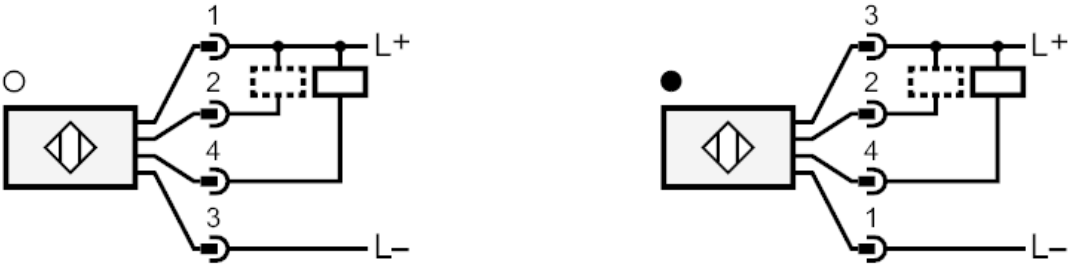

2 Function check output

Diagrams and graphs

excess gain graph

