IM5131

Inductive sensor

IMC3040-BPKG/K1/US-100-DPS

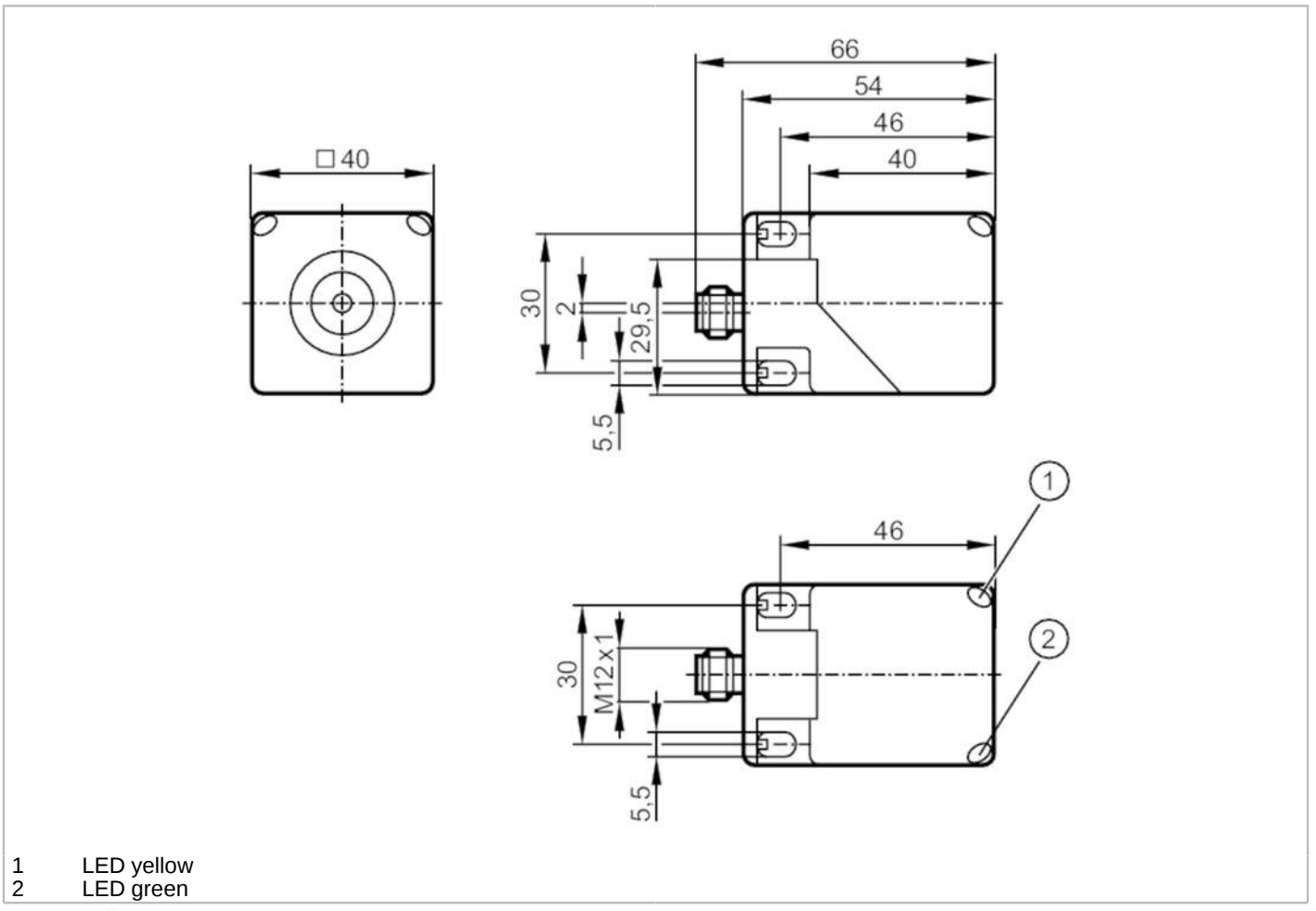

1 LED yellow
2 LED green

Product characteristics		
Electrical design		PNP
Output function		normally open
Sensing range	[mm]	40
Housing		rectangular
Dimensions	[mm]	40 x 40 x 54
Application		
Special feature		Correction factor K = 1; Magnetic-field immune
Magnetic-field immune		yes
Max. magnetic field immunity	[mT]	300
Electrical data		
Operating voltage	[V]	10...36 DC
Current consumption	[mA]	< 20
Protection class		II
Reverse polarity protection		yes
Outputs		
Electrical design		PNP
Output function		normally open

IM5131

Inductive sensor

IMC3040-BPKG/K1/US-100-DPS

Max. voltage drop switching output DC	[V]	2.5	
Permanent current rating of switching output DC	[mA]	200	
Switching frequency DC	[Hz]	200	
Short-circuit protection		yes	
Type of short-circuit protection		pulsed	
Overload protection		yes	
Detection zone			
Sensing range	[mm]	40	
Real sensing range Sr	[mm]	40 ± 10 %	
Operating distance	[mm]	0...32.4	
Accuracy / deviations			
Correction factor		steel: 1 / stainless steel: 1 / brass: 1 / aluminium: 1 / copper: 1	
Hysteresis	[% of Sr]	1...20	
Switch point drift	[% of Sr]	-10...10	
Correction factor K = 1		yes	
Operating conditions			
Ambient temperature	[°C]	-25...70	
Protection		IP 67	
Tests / approvals			
EMC		EN 61000-4-2 ESD	8 kV CD / 6 kV AD
		EN 61000-4-3 HF radiated	10 V/m
		EN 61000-4-4 Burst	2 kV
		EN 61000-4-5 Surge	0,5 kV line to line, Ri: 2 Ohm
		EN 61000-4-6 HF conducted	10 V
		EN 55011	class B
MTTF	[years]	1161	
UL approval		Ta	-25...70 °C
		Enclosure type	Type 1
		power supply	Class 2
		File number UL	E174191
Mechanical data			
Weight	[g]	132.5	
Housing		rectangular	
Sensing face		5 positions selectable	
Mounting		non-flush mountable	
Dimensions	[mm]	40 x 40 x 54	
Materials		housing: PA; sensing face: PA black; end cap: PA; clamp: orange; screw: stainless steel (1.4567 / 304Cu)	
Displays / operating elements			
Display		switching status	1 x LED, yellow
		operation	1 x LED, green
Remarks			
Pack quantity		1 pcs.	

IM5131

Inductive sensor

IMC3040-BPKG/K1/US-100-DPS

Electrical connection - plug

Connector: 1 x M12; coding: A; Locking: locking, rotatable, stainless steel (1.4404 / 316L)

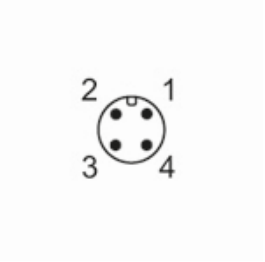

Connection

