# MFH211

## Cylinder sensor

**MFB3002BBPKG/B/500/0,12M/ZH/DT**

customer-specific

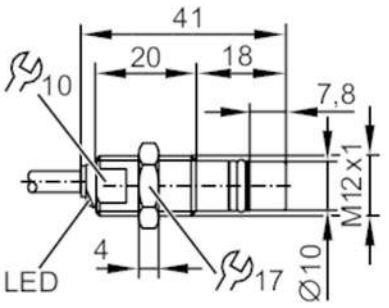


| | | |
|---|---|---|
| **Product characteristics** | | |
| Electrical design | | PNP |
| Output function | | normally open |
| Sensing range | [mm] | 1.8 |
| Housing | | threaded type |
| Dimensions | [mm] | M12 x 1 / L = 41 |
| **Application** | | |
| Special feature | | Full-metal housing |
| Application | | hydraulic cylinders |
| Media | | detects ferrous metals |
| Min. bursting pressure | [bar] | 2000 |
| Pressure rating | [bar] | 500 |
| **Electrical data** | | |
| Operating voltage | [V] | 10...36 DC |
| Current consumption | [mA] | < 23 |
| Protection class | | III |
| Reverse polarity protection | | yes |
| **Outputs** | | |
| Electrical design | | PNP |
| Output function | | normally open |
| Max. voltage drop switching output DC | [V] | 1.6 |
| Max. leakage current | [mA] | 0.1 |
| Permanent current rating of switching output DC | [mA] | 200 |
| Switching frequency DC | [Hz] | 1000 |
| Short-circuit protection | | yes |
| Type of short-circuit protection | | pulsed |
| Overload protection | | yes |

# MFH211

## Cylinder sensor

**MFB3002BBPKG/B/500/0,12M/ZH/DT**

| | | | |
|---|---|---|---|
| **Detection zone** | | | |
| Sensing range | [mm] | 1.8 | |
| **Accuracy / deviations** | | | |
| Hysteresis | [% of Sr] | < 15 | |
| Switch point drift | [% of Sr] | 10 | |
| Repeatability | [% of Sr] | 10 | |
| **Operating conditions** | | | |
| Pressure peak | [bar] | 1000 | |
| Ambient temperature | [°C] | -25...85 | |
| Protection | | IP 65; IP 68; IP 69K | |
| **Tests / approvals** | | | |
| EMC | | EN 61000-4-2 ESD | 4 kV CD / 8 kV AD |
| | | EN 61000-4-3 HF radiated | 10 V/m |
| | | EN 61000-4-4 Burst | 2 kV |
| | | EN 61000-4-6 HF conducted | 10 V |
| | | EN 55011 | class B |
| | | DIN ISO 11452-5 | 100 V/m |
| Vibration resistance | | EN 60068-2-6 Fc | 20 g 50 sweep cycles, 1 octave per minute, in 3 axes / 10...3000 Hz -20...50 °C |
| Shock resistance | | EN 60068-2-27 Ea | 100 g 11 ms half-sine; 3 shocks each in every direction of the 3 coordinate axes / -40...85 °C |
| Continuous shock resistance | | EN 60068-2-27 Ea | 40 g 6 ms; 4000 shocks each in every direction of the 3 coordinate axes / -20...50 °C |
| **Mechanical data** | | | |
| Weight | [g] | 47.3 | |
| Housing | | threaded type | |
| Mounting | | flush mountable | |
| Dimensions | [mm] | M12 x 1 / L = 41 | |
| Thread designation | | M12 x 1 | |
| Materials | | housing: stainless steel; O-ring: FKM; supporting ring: PTFE | |
| Min. pressure cycles | | 10 million | |
| Tightening torque | [Nm] | < 25 | |
| Full-metal housing | | yes | |
| **Displays / operating elements** | | | |
| Display | | switching status | 1 x LED, yellow |
| **Accessories** | | | |
| Items supplied | | lock nuts: 1 | |
| **Remarks** | | | |
| Notes | | customer-specific | |
| Pack quantity | | 1 pcs. | |

# MFH211

## Cylinder sensor

**MFB3002BBPKG/B/500/0,12M/ZH/DT**

### Electrical connection

Cable: 0.125 m, PUR, Ø 4.9 mm; 3 x 0.5 mm²

### Electrical connection - plug

Connector: 1 x DEUTSCH connector (DT04-3P-CE02); potted

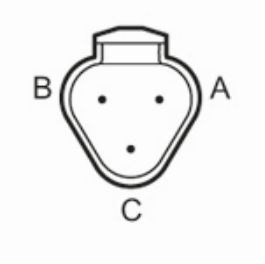


### Connection

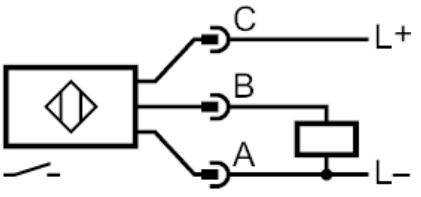


### Diagrams and graphs

Installation

