PN7071
PN-250-SER14-QFRKG/US/ /V

Pressure sensors

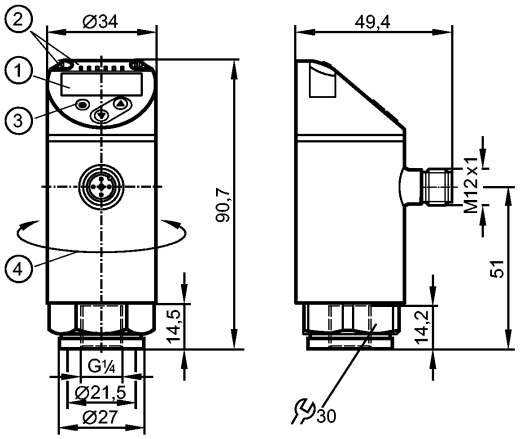

1: 4-digit alphanumeric display / alternating indication of red and green
2: LEDs (display unit / switching status)
3: Programming button
4: Upper part of the housing can be rotated by 345°

Product characteristics

Electronic pressure monitor
M12 connector
Function programmable
Measuring element: metal thin film cell
Process connection: G ¼ I
2 outputs OUT1 = switching output OUT2 = switching output
4-digit alphanumeric display / alternating indication of red and green
Measuring range: 0...250 bar / 0...3625 psi / 0...25 MPa

Application

Application		Type of pressure: relative pressure Group 2 fluids according to the Pressure Equipment Directive (PED), group 1 fluids on request		
Pressure rating		500 bar	7250 psi	50 MPa
Bursting pressure min.		1100 bar	15950 psi	110 MPa
Medium temperature	[°C]	-25...80		

Electrical data

Electrical design		DC PNP/NPN
Operating voltage	[V]	18...30 DC [1])
Current consumption	[mA]	< 35
Insulation resistance	[MΩ]	> 100 (500 V DC)
Protection class		III
Reverse polarity protection		yes

Outputs

Output		2 outputs OUT1 = switching output OUT2 = switching output
Output function		2 x normally open / closed programmable
Current rating	[mA]	150; 200 (...60 °C); 250 (...40 °C)
Voltage drop	[V]	< 2.5
Short-circuit protection		pulsed
Overload protection		yes
Switching frequency	[Hz]	≤ 170

PN7071 - Electronic pressure monitor - eclass: 27201302 / 27-20-13-02

Measuring / setting range			
Measuring range	0...250 bar	0...3625 psi	0...25 MPa
Setting range			
Set point, SP	2...250 bar	40...3620 psi	0.2...25.0 MPa
Reset point, rP	1...249 bar	20...3600 psi	0.1...24.9 MPa
in steps of	1 bar	20 psi	0.1 MPa
Accuracy / deviations			
Accuracy / deviations (in % of the span)			
Switch point accuracy	< ± 0.5		
Characteristics deviation *)	< ± 0.25 (BFSL) / < ± 0.5 (LS)		
Hysteresis	< ± 0.25		
Repeatability **)	< ± 0.1		
Long-term stability ***)	< ± 0.05		
Temperature coefficients (TEMPCO) in the temperature range -25...80° C (in % of the span per 10 K)			
Greatest TEMPCO of the zero point	0.2		
Greatest TEMPCO of the span	0.2		
Reaction times			
Power-on delay time [s]	0.3		
Min. response time switching output [ms]	< 3		
Delay time programmable dS, dr [s]	0...50		
Integrated watchdog	yes		
Software / programming			
Programming options	hysteresis / window function; NO / NC; output polarity; on delay, off delay; damping; display unit		
Interfaces			
IO-Link device			
Transfer type	COM2 (38.4 kBaud)		
IO-Link revision	1.1		
SDCI standard	IEC 61131-9		
IO-Link device ID	400 d / 00 01 90 h		
Profiles	Smart Sensor: Process Data Variable; Device Identification, Device Diagnosis		
SIO mode	yes		
Required master port class	A		
Process data analogue	1		
Process data binary	2		
Min. process cycle time [ms]	2.3		
Environment			
Ambient temperature [°C]	-25...80		
Storage temperature [°C]	-40...100		
Protection	IP 65 / IP 67		
Tests / approvals			
Pressure equipment directive	Sound engineering practice		
EMC	DIN EN 61000-6-2 DIN EN 61000-6-3		
Shock resistance	DIN EN 60068-2-27	50 g (11 ms)	
Vibration resistance	DIN EN 60068-2-6	20 g (10...2000 Hz)	
MTTF [Years]	201.44		
UL approval number	J003		
Mechanical data			
Process connection	G ¼ I		
Materials (wetted parts)	1.4542		
Housing materials	1.4542; 1.4404; PBT+PC-GF 30; PBT-GF 20; PC		
Switching cycles min.	100 million		
Tightening torque [Nm]	25...35 (recommended tightening torque²)		
Weight [kg]	0.23		
Displays / operating elements			

PN7071 - Electronic pressure monitor - eclass: 27201302 / 27-20-13-02

Display	Display unit 3 x LED green (bar, psi, MPa) Switching status 2 x LED yellow 4-digit alphanumeric display / alternating indication Measured values of red and green
Electrical connection	
Connection	M12 connector; Gold-plated contacts
Wiring	
Core colours BK black BN brown BU blue WH white	 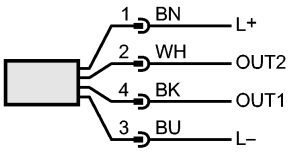 OUT1: switching output or IO-Link OUT2: switching output Colours to DIN EN 60947-5-2
Remarks	
Remarks	[1]) to EN50178, SELV, PELV *) BFSL = Best Fit Straight Line / LS = Limit Value Setting **) with temperature fluctuations < 10 K ***) in% of the span / 6 months [2]) Depends on lubrication, seal and pressure rating
Pack quantity [piece]	1