efector600

TR2439

TR-000KDBM12-MFPKG/US/

Evaluation systems

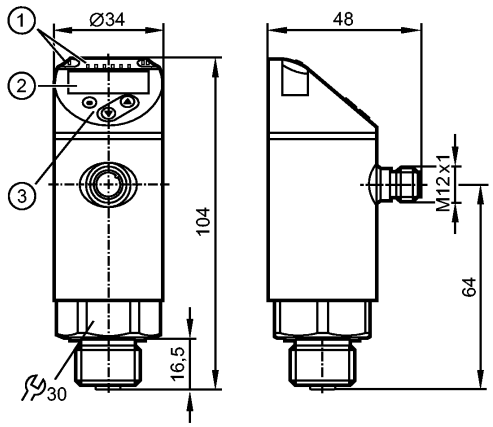

1: LEDs (display unit / switching status)
2: 4-digit alphanumeric display / alternating indication of red and green
3: Programming buttons

CE cULus LISTED IO-Link

Product characteristics
Evaluation unit for temperature sensors
Process connection: G ½ A
for Pt100 and Pt1000 measuring elements
Switching output, analog output 4...20 mA or 0...10 V
4-digit alphanumeric display
Measuring range: -100...600 °C / -148...1112 °F
Factory setting: -40...300 °C / -40...572 °F

Electrical data		
Electrical design		DC PNP/NPN
Operating voltage	[V]	18...32 DC; cULus - Class 2 source required
Current consumption	[mA]	< 50
Protection class		III
Reverse polarity protection		yes

Outputs		
Output		Switching output, analog output 4...20 mA or 0...10 V
Output function		1 x normally open / closed programmable + 1 x analog (4...20 mA / 0...10 V, scalable)
Current rating	[mA]	250
Voltage drop	[V]	< 2.5
Short-circuit protection		yes (non-latching)
Overload protection		yes
Analog output		4...20 mA / 0...10 V
Max. load	[Ω]	4...20 mA: 500
Min. load	[Ω]	0...10 V: 2000

Measuring / setting range		
Measuring range	-100...600 °C	-148...1112 °F
Factory setting	-40...300 °C / -40...572 °F	
Setting range		
Set point, SP	-99.8...600 °C	-147.6...1112 °F
Reset point, rP	-100...599.8 °C	-148...1111.6 °F

Analog start point, ASP		-100...595 °C	-148...1103 °F
Analog end point, AEP		-95...600 °C	-139...1112 °F
in steps of		0.1 °C	0.1 °F
Resolution			
Switching output	[K]	0.1	
Analog output	[K]	MS / 4096 *) | MS / 3561 **)	
Display	[K]	0.1	
Accuracy / deviations			
Switch point accuracy	[K]	± 0.3 + (± 0.1 % MS)	
Analog output	[K]	± 0.3 + (± 0.1 % MS)	
Display	[K]	± 0.3 + (± 0.1 % MS)	
Temperature coefficients (in % of the span per 10 K)		0.1	
Reaction times			
Power-on delay time	[s]	1	
Response time Switching output	[ms]	390	
Response time analog output		390 [ms]	
Integrated watchdog		yes	
Software / programming			
Programming options		hysteresis / window function; NO / NC; on delay, off delay; damping; display unit; current/ voltage output	
Interfaces			
IO-Link Device			
Transfer type		COM2 (38.4 KBaud)	
IO-Link revision		1.1	
Environment			
Ambient temperature	[°C]	-25...80	
Storage temperature	[°C]	-40...100	
Protection		IP 67	
Tests / approvals			
EMC		DIN EN 61000-6-3 DIN EN 61000-6-2	
Shock resistance		DIN IEC 68-2-27:	50 g (11 ms)
Vibration resistance		DIN EN 60068-2-6	20 g (10...2000 Hz)
MTTF	[Years]	233	
UL approval number		K011	
Mechanical data			
Process connection		G ½ A	
Housing materials		304 / 1.4301 (V2A); EPDM/X; PC; PBT; FPM	
Weight	[kg]	0.199	
Displays / operating elements			
Display		Display unit: 2 x LED green Switching status: LED yellow 4-digit alphanumeric display / alternating indication Measured values of red and green	
Electrical connection			

TR2439

TR-000KDBM12-MFPKG/US/

Connection	M12 connector; gold-plated contacts

Wiring



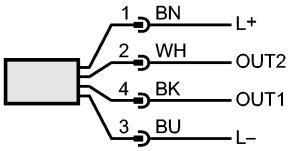

OUT1: switching output or IO-Link
OUT2: Analog output
Colours to DIN EN 60947-5-2

Remarks

Remarks	*) current output **) voltage output MS = set measuring span cULus - Class 2 source required
Pack quantity [piece]	1