E21224

Mounting adapter for photoelectric level sensors

FLANGE ADAPTER G1 FOR O1D

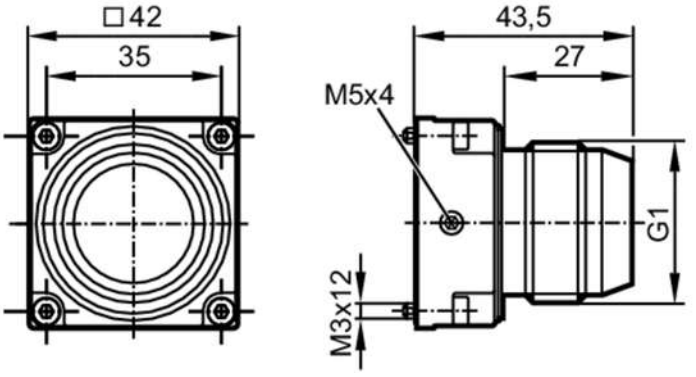

Application		
Design		for optical distance sensors
Mechanical data		
Weight	[g]	231
Dimensions	[mm]	42 x 43.5 x 42
Materials		flange: stainless steel (1.4404 / 316L); Sealing: FKM; Protective cover: PMMA transparent; screws: stainless steel; washers: stainless steel
Tightening torque	[Nm]	0.6; (screws)
Accessories		
Items supplied		cylinder screws: 4
		washers: 4
Remarks		
Pack quantity		1 pcs.