FM-IM-2UPLI63X
Flow Monitoring – For the Connection of Flow Sensors IO-Link Device with Current and Transistor Outputs

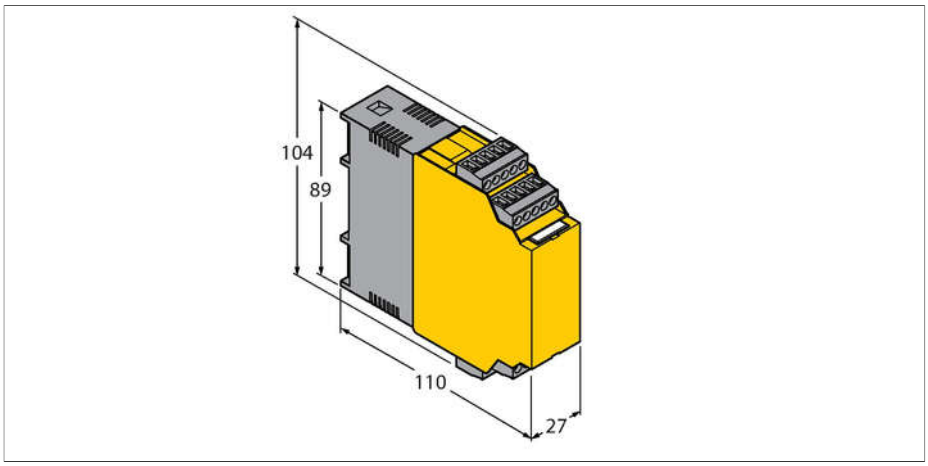



Technical data

Type	FM-IM-2UPLI63X
Ident. no.	7525104
Electrical data	
Operating voltage	20…30 VDC
Power consumption	< 4.5 W
No-load current I_0	≤ 63 mA
Teach modes	Min/max adjustment. Teach modes incl. DeltaFlow monitoring (teach modes are automatically released with the change of flow speed).
Flow speed	[%] after min/max adjustment (permanent)
Medium temperature	[°C] with the SET button temporarily pressed
Repeatability flow rate	typical ± 1 % (of full scale)
Repeatability media temperature	typical ± 1 K
Measuring accuracy media temperature	typical ± 7 K
Switchpoint hysteresis media temperature	2 K
Input function	Connection of flow sensors
Sensor voltage	≤ 15 VDC
Sensor current	≤ 35 mA
Sensor current limitation	approx. 110 mA
Measuring frequency	5 Hz (every 200 ms with software filter)
Output functions	
Flow monitoring	Analog output
Temperature monitoring	transistor output
Error monitoring	transistor output
Current range	4…20 mA / 20…4 mA parametrizable

Features

- Analog output for flow
- Transistor switching outputs for temperature and faults
- Teaching upper and lower flow limit
- LED band for indication of flow rate and media temperature
- Monitoring of operating and display range
- Detection of wire-break and short-circuit on the sensor side
- Standard IO or IO-Link operating mode
- Parametrized via pushbutton or software-supported via IO-Link

Functional principle

All non-Ex flow sensors from the FCS series (immersion sensors) and FCI series (inline series) can be operated with the FM-IM external processing unit.

The flow module features four status LEDs as well as a 10-segment LED band for local monitoring. Software-based diagnostic options are also available to the user, such as wire-break and short-circuit on the sensor side. Furthermore, monitoring of flow rates and media temperatures within a predefined operating and display range.

The upper and lower limit are determined in relation to the analog output signal and taught in using the implemented teach mode. Working on the calorimetric principle, the connectible

FM-IM-2UPLI63X| 17-07-2020 10-52 | Technical modifications reserved

Technical data

Load	< 600 Ω
Characteristic	Output of probe signal, no linearization
Error recognition	NAMUR error limits
Switching characteristic	PNP
Switching state	active high / active low parametrizable (transistor output error monitoring only active low)
Switching voltage	20…30 VDC
Switching current	100 mA
Electrical connections	5-pole removable reverse polarity protected terminal blocks
Connection mode	screw connection
Terminal cross-section	1.5…2.5 mm²
IO-Link	
Communication	IO-Link spec. 1.0
Transmission rate	38.4 kbps (COM 2)
Transmission physics	Transmission physics 3-wire physics (PHY 2)
Communication channel	Clamp 12 and via front panel jack COM (PC)
Communication modes	Tool based engineering via FDT / DTM, IODD. Acyclic communication via On-Request Data Objects
Included in the SIDI GSDML	Yes
Tests/approvals	
Approvals	CE, C-UL U.S. submitted
Electromagnetic compatibility (EMC)	acc. to NE21
Relative humidity	EN 60068-2--38
Mechanical data	
Design	Signal processor
Dimensions	89 x 110 x 27 mm
Housing material	Polycarbonate/ABS
Ambient temperature	-25…+70 °C
Mounting type	DIN rail mounting and mounting panel
Protection class	IP20
MTBF	117 Years

sensors not only detect the flow rate but also the media temperature.

The flow module can be operated either in IO-Link (IOL) or in standard IO (SIO) mode via the integrated IO-Link interface. In SIO mode, the switching outputs are operated in the standard way. In IOL mode the current process signal is transmitted cyclically as a 10 bit-serial value.

Parametrization is initiated either via pushbutton or software-supported via IO-Link interface. The actual parametrization is then implemented via the tool-based DTM or IODD within the FDT frame PACTware™ or acyclically near the control via On-Request Data Objects (ORDO).

FM-IM-2UPLI63X| 17-07-2020 10-52 | Technical modifications reserved

LED display

LED	Color	Status	Description
Pwr	green	on	Operating voltage applied Device ready for operation
		flashing	Operating voltage applied IO-Link communication active (inverted flash with T on 900 ms and T off 100 ms)
Flow	yellow	on	Active current output
		flashing	Teach mode / display of diagnostic data for specification see manual
Temp	yellow	off	Switching output media temperature [low]
		on	Switching output media temperature [high]
		flashing	Teach mode / display of diagnostic data for specification see manual
Fault	Red	Off	Switching output fault [high]
		On	Switching output flow [low] (for error pattern in combination with LEDs see manual)

For detailed description of the display patterns and flashing codes see instruction manual FM-IM/FMX-IM

IO-Link (Process Data Objects)

Bit	15	14	13	12	11	10	9	8	7	6	5	4	3	2	1	0
	Flow Value 10 Bit (Bit 15 = MSB, Bit 6 = LSB)										not assigned			Out 3 (Fault)	Out 2 (Temp)	Out1 (Flow)

FM-IM-2UPLI63X| 17-07-2020 10-52 | Technical modifications reserved