DI5026

Compact evaluation unit for speed monitoring

DIA3010-WRKG/IO

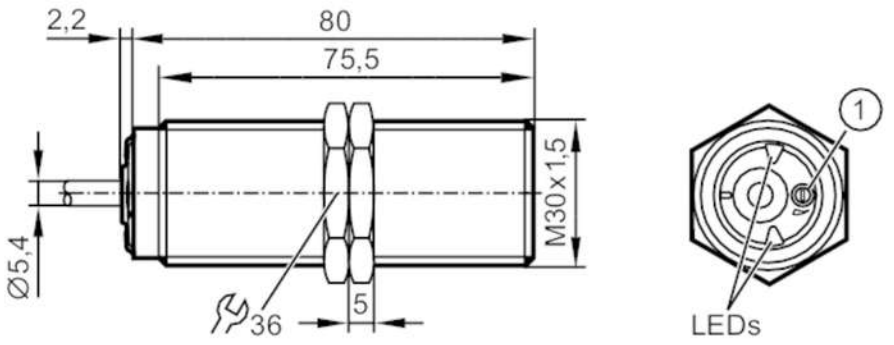

1 potentiometer

Product characteristics		
Electrical design		PNP/NPN
Output function		normally open / normally closed; (parameterisable)
Sensing range	[mm]	10
Communication interface		IO-Link
Housing		threaded type
Dimensions	[mm]	M30 x 1.5 / L = 80
Application		
Application		simple evaluation of rotating and linear movement with regard to underspeed; blocking
Electrical data		
Nominal voltage DC	[V]	10...36
Current consumption	[mA]	< 22
Protection class		III
Reverse polarity protection		yes
Outputs		
Electrical design		PNP/NPN
Output function		normally open / normally closed; (parameterisable)
Max. voltage drop switching output DC	[V]	2.5
Permanent current rating of switching output DC	[mA]	250
Short-time current rating of switching output	[mA]	250
Short-circuit proof		yes
Overload protection		yes
Detection zone		
Sensing range	[mm]	10
Sensing range adjustable		no
Operating distance	[mm]	0...8.1
Measuring/setting range		
Setting range	[Imp/min]	5...3600
Measuring principle		inductive

DI5026

Compact evaluation unit for speed monitoring

DIA3010-WRKG/IO

Accuracy / deviations			
Correction factor		steel: 1 / stainless steel: 0.7 / brass: 0.5 / aluminium: 0.4 / copper: 0.3	
Hysteresis	[% of Sr]	10	
Response times			
Start-up delay	[s]	0...30	
Max. damping frequency	[Imp/min]	18000	
Software / programming			
Adjustment of the switch point		Multiturn potentiometer or IO-Link	
Interfaces			
Communication interface		IO-Link	
Operating conditions			
Ambient temperature	[°C]	-25...80	
Storage temperature	[°C]	-25...80	
Protection		IP 65; IP 67	
Tests / approvals			
MTTF	[years]	656	
Mechanical data			
Weight	[g]	182.7	
Housing		threaded type	
Mounting		flush mountable	
Dimensions	[mm]	M30 x 1.5 / L = 80	
Thread designation		M30 x 1.5	
Materials		brass special coating; PA; TPE-U	
Tightening torque	[Nm]	50	
Displays / operating elements			
Display		switching status	1 x LED, green
Accessories			
Items supplied		lock nuts: 2	

DI5026

Compact evaluation unit for speed monitoring

DIA3010-WRKG/IO

Electrical connection

Cable: 2 m, PUR; 3 x 0.5 mm²

Connection

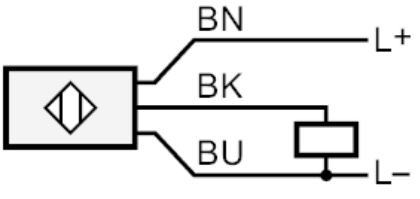

BK:	OUT / IO-Link
	Core colours :
BK =	black
BN =	brown
BU =	blue